1. General

The NM8N series moulded case circuit breaker is suitable for AC circuits with frequencies of 50/60Hz, rated voltages up to AC 690V, and DC systems with rated voltages up to DC 1000V. It has a rated current range from 16A to 1600A. This circuit breaker provides protection against overload, short circuit, and undervoltage conditions. Additionally, it offers the same protection for infrequent motor starts.

The products offer power distribution protection, motor protection, residual current protection, and isolation.

The circuit breaker can be installed vertically or horizontally and supports both top and bottom line entry configurations.

Compliance with Standards:
IEC 60947-1 general rules for low-voltage switchgear and control equipment;
IEC 60947-2 low-voltage switchgear and control equipment circuit breakers;
IEC 60947-3 low-voltage switchgear and control equipment switches,
disconnectors and fuse combination appliances;
IEC 60947-4-1 Electromechanical contactors and motor starters (including motor protectors) for low voltage switchgear and control equipment.

2. Operating conditions

2.1 Temperature:
Operating and storage temperature is -40°C～+70°C; the average value within 24 hours does not exceed +35°C; when the ambient temperature is -40°C～+70°C, users need to consider derating or temperature compensation whose details can be referred to in Sections 10.3 and 10.4.

2.2 Altitude: ≤ 2000m;

2.3 Pollution grade: Grade 3;

2.4 IP grade: IP40

2.5Environmental conditions:
At the mounting site, relative humidity should not exceed 50% at a maximum temperature of +40°C. Higher humidity is permissible at lower temperatures, such as 90% RH at +20°C. Special measures should be taken to prevent dew formation.

3. Type designation

3.1 NM8N Moulded Case Circuit Breaker and Switch Disconnector

N M 8 N □ - □ □ □ □ □ □

- Special application
- Poles:
  1P: 1-pole
  2P: 2-pole
  3P: 3-pole
  4B: 4-pole, there is no over-current protection at pole N and N-pole operates with other three poles
  4C: 4-pole, there is over-current protection at pole N and N-pole operates with other three poles
- Rated Current corresponding to Frame Size
  125 : 16-20-25-32-40-50-63-80-100-125
  250 : 32-63-100-125-160-180-200-225-250
  400 : 250-315-350-400
  630 : 400-500-630
  800 : 500-630-700-800
  1600 : 800-1000-1250-1600
- Release type code
  TM: Thermal-magnetic type
  EN: Basic electronic type for power distribution
  EM: Standard electronic type for power distribution
  M: Magnetic type for motor protection
  ENM: Basic electronic type for motor protection
  EMM: Standard electronic type for motor protection
  Blank: Switch disconnector type
- Breaking capacity code: B, C, S, Q, H, R
  (Switch disconnector type has no code)
- Frame Size :
  125: 125A; 250: 250A; 400: 400A
  630: 630A; 800: 800A; 1600: 1600A
- DC: DC MCCB
  Blank: AC MCCB
  SD: Switch disconnector
- Design code
- Design sequence number
- MCCB
- Company code

3.2 NM8NL Residual Current Breaker

N M 8 N L - □ □ □ □

- Rated residual current code: RCD1 X:0.03-0.05-0.1-0.2-0.3-0.5-1-2A
- Rated residual current type: Default: AC type, A: A type
- Pole code: 3P: 3-pole 4P: 4-pole
- Frame size rated current: 125：125A；250：250A；400：400A；630：630A
- Residual current code
- Design code
- Design sequence number
- MCCB
- Company code

4. Technical data

NM8N Moulded Case Circuit Breaker		125					250				
Rated operating current In (A),40℃	Magnetic type	16-20-25-32-40-50-63-80-100-125					125-160-180-200-225-250				
	Thermal-magnetic type	16-20-25-32-40-50-63-80-100-125					125-160-180-200-225-250				
	Electronic type	—					32-63-100-160-250				
Electric characteristics											
Rated insulation voltage Ui (V)		1000					1000				
Rated impulse withstand voltage Uimp (kV)		8					8				
Rated operational voltage Ue(V),AC 50/60Hz		380/400/415,440,500,660/690					380/400/415,440,500,660/690				
Breaking capacity code		C	S	Q	H	R	C	S	Q	H	R
Number of poles	1P	■	■	—	—	—	■	■	—	—	—
	2P	■	■	■	■	■	■	■	■	■	■
	3P	■	■	■	■	■	■	■	■	■	■
	4P	■	■	■	■	■	■	■	■	■	■
Rated ultimate short-circuit breaking capacity Icu (kA)	AC220/230/240V[1]	36	50	—	—	—	36	50	—	—	—
	AC380/400/415V	36	50	70	100	150	36	50	70	100	150
	AC440V	36	50	70	100	100	36	50	70	100	100
	AC500V	25	40	40	50	50	25	40	40	50	50
	AC660/690V	6	8	8	10	10	6	8	8	10	10
Rated service short-circuit breaking capacity (kA)	AC220/230/240V[1]	36	50	—	—	—	36	50	—	—	—
	AC380/400/415V	36	50	70	100	150	36	50	70	100	150
	AC440V	36	50	70	100	100	36	50	70	100	100
	AC500V	25	40	40	50	50	25	40	40	50	50
	AC660/690V	6	8	8	10	10	6	8	8	10	10
Rated short-time withstand current Icw (kA,1s)		—					1(32A,63A);2(100A,160A);3(250A)				
Standard		IEC/EN 60947-2									
Utilization category		A					A				
Ambient temperature		-40℃ ~+70℃ [2]									
Suitable for Isolation		■					■				
Arcing distance		0					0				
Mechanical life (CO recycle)	Maintenance	25000					25000				
Electrical life (CO recycle)	AC415V,In	10000					10000				
	AC690V,In	2000					1500				
Release units											
Distribution protection	TM	■					■				
	EN	—					■				
	EM	—					■				
Motor protection	M	■					■				
	ENM	—					■				
	EMM	—					■				
Mounting and connection											
Fixed	Front connection	■					■				
	Rear connection	■					■				
Plug-in[3]	Front connection	■					■				
	Rear connection	■					■				
Withdrawable[3]	Front connection	—					—				
	Rear connection	—					—				
DIN rail	Front connection	■					■				
Dimension											
Dimension (mm) W×H×D	Width (1P/2P/3P/4P)	35/62/90/120					10/70/105/140				
	Height	140					157				
	Depth	78.5					88.7				
Weight											
Weight(kg)/Fixed	1P	0.5					0.75				
	2P	0.83					1.3				
	3P	1.19					1.85(EM/M) ; 2.0(EN/EM)				
	4P	1.55					2.5(TM/M) ; 2.65(EN/EM)				

Note : [1] For 1 pole product only;
[2] The operating temperature of basic (dial code) electronic type is -35℃ ~+70℃ ,and the operating temperature of standard (liquid crystal) electronic type is -25℃ ~+70℃ ;
[3] For 3/4 pole product only;
[4] The data in "()" is for motor type.

	400					630					800					1600		
	250-315-350-400					400-500					500-630-700-800					—		
	250-315-350-400					400-500					500-630-700-800					800-1000-1250-1600		
	250-400					400-630					630-800					800-1000-1250-1600		
	1000					1000					1000					1000		
	12					12					12					8		
	380/400/415,440,500,600/690					380/400/415,440,500,660/690					380/400/415,440,500,660/690					380/400/415,440, 500,660/690		
	C	S	Q	H	R	C	S	Q	H	R	C	S	Q	H	R	S	Q	H
	—	—	—	—	—	—	—	—	—	—	—	—	—	—	—	—	—	—
	—	—	—	—	—	—	—	—	—	—	—	—	—	—	—	—	—	—
	■	■	■	■	■	■	■	■	■	■	■	■	■	■	■	■	■	■
	■	■	■	■	■	■	■	■	■	■	■	■	■	■	■	■	■	■
	—	—	—	—	—	—	—	—	—	—	—	—	—	—	—	—	—	—
	36	50	70	100	150	36	50	70	100	150	36	50	70	100	150	50	70	100
	36	50	70	100	100	36	50	70	100	100	36	50	70	100	100	50	65	65
	25	40	40	50	50	25	40	40	50	50	25	40	40	50	100	40	50	50
	10	12	12	15	15	10	12	12	15	15	12	15	15	20	30	30	30	30
	—	—	—	—	—	—	—	—	—	—	—	—	—	—	—	—	—	—
	36	50	70	100	150	36	50	70	100	150	36	50	70	100	150	50	70	70
	36	50	70	100	100	36	50	70	100	100	36	50	70	100	100	40	50	50
	25	40	40	50	50	25	40	40	50	50	25	40	40	50	100	30	40	40
	10	12	12	15	15	10	12	12	15	15	12	15	15	15	15	30	30	30
	5					5(400A);8(630A)					10					20		
	IEC/EN 60947-2																	
	A(Thermal-magnetic)/B(Electronic)					A(Thermal-magnetic)/B(Electronic)					A(Thermal-magnetic)/B(Electronic)					A(Thermal-magnetic)/ B(Electronic)		
	-40℃ ~+70℃ [2]																	
	■					■					■					■		
	0					0					0					0		
	20000					20000					20000					10000		
	8000					8000					8000					3000		
	1500					1500					1000					1000		
	■					■					■					■		
	■					■					■					■		
	■					■					■					■		
	■					■					■					■		
	■					■					■					—		
	■					■					■					—		
	■					■					—					■		
	■					■					■					—		
	■					■					—					—		
	■					■					—					—		
	■					■					■					—		
	■					■					■					—		
	—					—					—					—		
	140/185					140/185					195/260					210/280		
	255					255					300					286		
	113					113					133					167 (195) [4]		
	—					—					—					—		
	—					—					—					—		
	5.2(TM/M) ; 6.7(EN/EM)					5.5(TM/M) ; 7.0(EN/EM)					10.5(TM/M) ; 10.5(EN/EM)					13.5(16)[4]		
	5.8(TM/M) ; 7.8(EN/EM)					5.8(TM/M) ; 7.8(EN/EM)					13.5(TM/M) ; 13.5(EN/EM)					17.5(20)[4]		

NM8N DC Moulded Case Circuit Breaker		125					250				
Rated operating current In (A),40℃		16-20-25-32-40-50-63-80-100-125					125-160-180-200-225-250				
Electric characteristics											
Rated insulation voltage Ui (V)		1000					1000				
Rated impulse withstand voltage Uimp (kV)		8					8				
Rated operational voltage Ue (V),DC		250 , 500 , 750 , 1000					250 , 500 , 750 , 1000				
Breaking capacity code		B	C	S	Q	H	B	C	S	Q	H
Number of poles	1P	■	■	■	—	—	■	■	■	—	—
	2P	■	■	■	■	■	■	■	■	■	■
	3P	■	■	■	■	■	■	■	■	■	■
	4P	■	■	■	■	■	■	■	■	■	■
Rated ultimate short-circuit breaking capacity Icu(kA)	DC250V 1P	25	36	50	—	—	25	36	50	—	—
	DC500V 2P in series	25	36	50	70	100	25	36	50	70	100
	DC750V 3P in series	25	36	50	70	100	25	36	50	70	100
	DC1000V 4P in series	25	36	50	70	100	25	36	50	70	100
Rated service short-circuit breaking capacity (kA)	DC250V 1P	25	36	50	—	—	25	36	50	—	—
	DC500V 2P in series	25	36	50	70	100	25	36	50	70	100
	DC750V 3P in series	25	36	50	70	100	25	36	50	70	100
	DC1000V 4P in series	25	36	50	70	100	25	36	50	70	100
Standard		IEC/EN 60947-2									
Utilization category		A					A				
Ambient temperature		-40℃ ~+70℃									
Suitable for Isolation		■					■				
Arcing distance		0					0				
Mechanical life (CO recycle)	Maintenance free	15000					15000				
Electrical life (CO recycle)	DC1000V,In	2000					1500				
Release units											
Distribution protection	TM	■					■				
Mounting and connection											
Fixed	Front connection	■					■				
	Rear connection	■					■				
Plug-in[1]	Front connection	■					■				
	Rear connection	■					■				
Withdrawable[1]	Front connection	—					—				
	Rear connection	—					—				
DIN rail	Front connection	■					■				
Dimension											
Dimension(mm) W×H×D	Width(1P/2P/3P/4P)	35/62/90/120					40/70/105/140				
	Height	140					157				
	Depth	78.5					88.7				
Weight											
Weight(kg)/Fixed	1P	0.5					0.75				
	2P	0.83					1.3				
	3P	1.19					1.85				
	4P	1.55					2.5				

Note : [1] For 3/4 pole product only.

	400					630					800					1600	
	250-315-350-400					400-500					500-630-700-800					800-1000-1250-1600	
	1000					1000					1250					1000	
	12					12					12					8	
	750 , 1000					750 , 1000					750 , 1000					750 , 1000	
	B	C	S	Q	H	B	C	S	Q	H	B	C	S	Q	H	B	C
	—	—	—	—	—	—	—	—	—	—	—	—	—	—	—	—	—
	—	—	—	—	—	—	—	—	—	—	—	—	—	—	—	—	—
	■	■	■	■	■	■	■	■	■	■	■	■	■	■	■	■	■
	■	■	■	■	■	■	■	■	■	■	■	■	■	■	■	■	■
	—	—	—	—	—	—	—	—	—	—	—	—	—	—	—	—	—
	—	—	—	—	—	—	—	—	—	—	—	—	—	—	—	—	—
	25	36	50	70	100	25	36	50	70	100	25	36	50	70	100	25	36
	25	36	50	70	100	25	36	50	70	100	25	36	50	70	100	25	36
	—	—	—	—	—	—	—	—	—	—	—	—	—	—	—	—	—
	—	—	—	—	—	—	—	—	—	—	—	—	—	—	—	—	—
	25	36	50	70	100	25	36	50	70	100	25	36	50	70	100	25	36
	25	36	50	70	100	25	36	50	70	100	25	36	50	70	100	25	36
	IEC/EN 60947-2																
	A					A					A					A	
	-40℃ ~+70℃																
	■					■					■					■	
	0					0					0					0	
	15000					15000					10000					6000	
	1500					1500					1000					1000	
	■					■					■					■	
	■					■					—					■	
	■					■					■					—	
	■					■					—					—	
	■					■					—					—	
	■					■					■					—	
	■					■					■					—	
	—					—					—					—	
	140/185					140/185					195/260					210/280	
	255					255					300					286	
	113					113					133					167	
	—					—					—					—	
	—					—					—					—	
	5.2					5.5					10.3					13.5	
	6.7					7					13.5					17.5	

NM8NL Residual Current protection module		125	250	400	630
Rated operating current In (A), 40℃		125	250	400	630
Number of poles		3P、4P	3P、4P	3P、4P	3P、4P
Electric characteristics					
Rated insulation voltage Ui (V)		1000	1000	1000	1000
Rated insulation voltage Uimp (kV)		8	8	12	12
Rated operational voltage Ue(V),AC 50/60Hz		380/400/415、440	380/400/415、440	380/400/415、440	380/400/415、440
Rated current (A) of circuit breaker	TM	16-20-25-32-40-50-63-80-100-125	125-160-180-200-225-250	250-315-350-400A	400-500A
	EN	—	32-63-100-160-250	250-400	400-630
	EM	—	32-63-100-160-250	250-400	400-630
	M	16-20-25-32-40-50-63-80-100-125	125-160-180-200-225-250	250-315-350-400A	400-500A
	ENM	—	32-63-100-160-250	250-400	400-630
	EMM	—	32-63-100-160-250	250-400	400-630
Rated residual operating current I △ n(A)	RCD1 X (Eight-step adjusable)	0.03-0.05-0.1-0.2-0.3-0.5-1-2			
Rated residual non-operating current I △ no(A)		0.5I △ n	0.5I △ n	0.5I △ n	0.5I △ n
Limit non-actuating time △ t (ms)[1]		0-60-200-500-1000-2000			
Maximum breaking time (ms)	Total breaking time (adjustable)	100-300-500-1000-2000-3000			
Rated residual making and breaking capacity I △ m(kA)		0.25Icu	0.25Icu	0.25Icu	0.25Icu
Leakage alarm non-tripping function		□	□	□	□
Standard		IEC/EN 60947-2			
Residual current type		A/AC	A/AC	A/AC	A/AC
Suitable for Isolation		■	■	■	■
Ambient temperature		-25℃ ~+70℃			
Arcing distance		0	0	0	0
Dimension					
Dimension with circuit breaker (mm) W×H×D	Width (3P/4P)	90/120	105/140	140/185	140/185
	Height	205	232	355	355
	Depth	78.5	88	113	113
Weight					
Weight of residual current protection module (kg)	3P	0.43	0.84	1.98	1.98
	4P	0.51	1.08	2.69	2.68

Note : [1] When the residual operating current is set to 0.03A, the limit non-actuating time must be set to 0.

NM8NSD Switch Disconnector		125			250			400		800		1600	
NM8NSD Switch Disconnector Ith(A),40℃		125			250			400		800		1600	
Number of poles		2P	3P	4P	2P	3P	4P	3P	4P	3P	4P	3P	4P
Rated operational current Ie(A)		125			250			400		800		800-1000-1250-1600	
Rated operational voltage Ue(V)	AC (50/60Hz)	690			690			690		690		415/690	
	DC	500	750	1000	500	750	1000	750	1000	750	1000	750	1500
Rated insulation voltage Ui(V)		1000			1000			1000		1250		AC : 1000 DC : 1500	
Rated impulse withstand voltage Uimp(kV)		8			8			12		12		12	
Rated short-circuit making capacity Icm(kA)		3.2 (AC)/2(DC)			5(AC)/3.2(DC)			8(AC)/5(DC)		14		40(AC)/19.2(DC)	
Rated short-time withstand current Icw(kA)	1s	2			3.2			5		8/10		20(AC)/19.2(DC)	
	3s	2			3.2			5		8/10		20	
Standard		IEC/EN 60947-3, GB/T 14048.3											
Utilization category		AC-22A/AC-23A DC-22A/DC-23A			AC-22A/AC-23A DC-22A/DC-23A			AC-22A/AC-23A DC-22A/DC-23A		AC-22A/AC-23A DC-22A/DC-23A		AC-22A/AC-23A DC-22A/DC-23A	
Suitable for Isolation		■			■			■		■		■	
Ambient temperature		-40℃ ~+70℃											
Arcing distance		0			0			0		0		0	
Mechanical life (CO recycle)	Maintenance free	15000			15000			15000		10000		6000	
Electrical life (CO recycle)	AC415V,In	8000			6000			4000		2000		1000	
	AC690V,In	2000			1500			1500		1000		1000	
	DC1000V,In	2000			1500			1500		1000		1000	
Mounting and connection													
Fixed	Front connection	■			■			■		—		■	
	Rear connection	■			■			■		■		■	
Plug-in[1]	Front connection	■			■			■		—		—	
	Rear connection	■			■			■		—		—	
Withdrawable[1]	Front connection	—			—			■		■		—	
	Rear connection	—			—			■		■		—	
DIN rail	Front connection	■			■			—		—		—	
Dimension													
Dimension(mm) W×H×D	Width(2P/3P/4P)	62/90/120			70/105/140			140/185		195/260		210/280	
	Height	140			157			255		300		286	
	Depth	78.5			88.7			113		133		167(195)[2]	
Weight													
Weight(kg)/Fixed	2P	0.81			1.1			—		—		—	
	3P	1.05			1.75			5		9.5		13(15.5)[2]	
	4P	1.5			2.4			5.5		12.5		17(19.5)[2]	

Note : [1] For 3/4 pole product only;
[2] The data in "()" is for motor type.

5. Release

5.1 Protection for power distribution

5.1.1 Thermal-magnetic type release TM

Thermal-magnetic release of NM8N-125, 250, 400, 630, 800 and 1600 breakers can be set to meet protection requirements

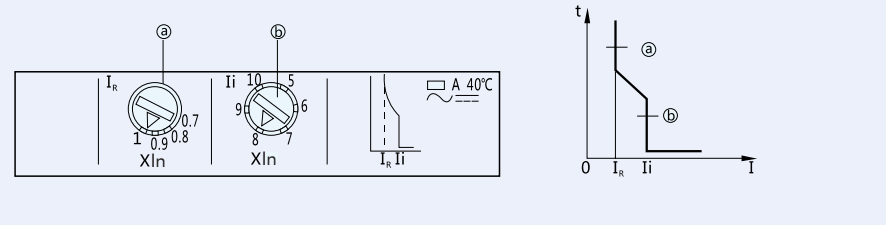

Thermal-magnetic release TM	125		250			400	630	800	1600
Number of poles	1P	2P/3P 4P	1P	2P/3P/4P		3P/4P	3P/4P	3P/4P	3P/4P
Rated current	16/20/25 32/40/50 63/80/100/125		125/160 180/200 225/250	125 160	180 200/225 250	250/315 350/400	400/500	500/630 700/800	800/1000 1250/1600
Over-load protection									
Setting current (A) $I_r=I_nx$	1.0 Non-adjustable	0.7-0.8-0.9-1.0	1.0 Non-adjustable	0.7-0.8-0.9-1.0					0.7-0.8-0.9-1.0
Short-circuit instantaneous protection									
Setting current (A) $I_i=I_nx$	10		10	7-8-9-10-11-12		5-6-7-8-9-10			6-7-8-9-10
Accuracy	±20%								
N-pole protection									
Setting current (A) $I_{iN}=I_nx$	/	10	/	The same with the other three-phase poles.					
Accuracy	±20%								

5.1.2 Basic electronic type release for power distribution EN

The EN Basic electronic trip unit provides three-stage protection: overload long-time protection, short circuit short-time protection, and short circuit instantaneous protection.

Electronic type EN		250	400	630	800	1600
Overload long-time protection and time delay setting	Setting current $I_r=I_nx$	0.4-0.5-0.6-0.7-0.8-0.9-0.95-1.0				
	$6I_r$ Tripping time T_r(s)	3-6-12-18, Accuracy ±10%				
Short circuit short-time protection and time delay setting	Setting current $I_{sd}=I_rx$	1.5-2-3-4-6-8-10, OFF, Accuracy ±15%				
	Tripping time T_{sd}(s)	0.1-0.2-0.3-0.4, Accuracy ±20% or ±40ms(higher value will be selected)				
Short circuit instantaneous protection	Setting current $I_i=I_nx$	2-3-4-6-8-10-12, OFF, Accuracy ±15%				
	Max. tripping time (ms)	60				
Neutral line protection	Setting current	$I_{rN}=(0.5,1)xI_n$, OFF; $I_{sdN}=(1.5\text{-}2\text{-}3\text{-}4\text{-}6\text{-}8\text{-}10)I_{rN}$ $I_{iN}=(2\text{-}3\text{-}4\text{-}6\text{-}8\text{-}10\text{-}12)I_{rN}$				
	Tripping time (s)	The same with the other three-phase poles.				

- Overload long-time protection and long-time delay setting

—The long-time current setting (Ir) can be adjusted according to user requirements. The long-time delay (Tr) corresponds to 6 times the current setting Ir.

- Short circuit short-time protection and short-time delay setting

—The current value (Isd) and the tripping time-delay (Tsd) can both be adjusted to meet user requirements.

- Short circuit instantaneous protection characteristics setting

—The current value Ii can be adjusted according to the user's needs.

- Neutral line protection feature setting

The four-pole circuit breaker N-pole protection current value can be adjusted according to user needs. The N pole tripping time is the same with the other three-phase poles.

5.1.3 Standard electronic type release for power distribution EM

The EM release offers four-stage protection: overload long-time protection, short circuit short-time protection, short circuit instantaneous protection, and earth fault protection. It also provides real-time current display and adjustable protection parameters.

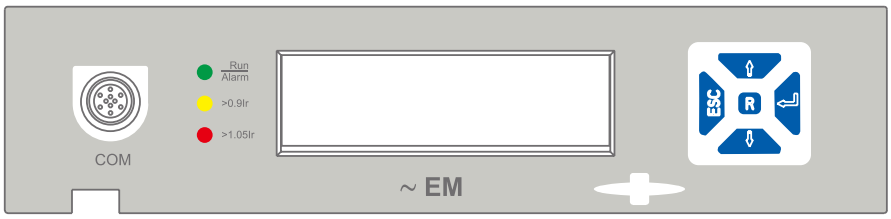

The EM release information display, fault information display, and parameter setting functions.

Electronic type EM		250	400	630	800	1600
Overload long-time protection and time-delay setting	Setting current $I_r=I_n x$	0.4~1.0, Stepping1A				
	$6I_r$ Tripping time T_r(s)	3~18, 1s, Accuracy ±10%				
Short circuit short-time protection and time delay setting	Setting current $I_{sd}=I_r x$	1.5~10, Stepping1A, OFF, Accuracy ±15%				
	Tripping time T_{sd}(s)	0.1-0.2-0.3-0.4, Accuracy ±20% or ±40ms(higher value will be selected)				
Short circuit instantaneous protection	Setting current $I_i=I_n x$	1.5~12, Stepping1A, OFF, Accuracy ±15%				
	Max. tripping time (ms)	60				
Earth fault protection	Setting current $I_g=I_n x$	0.4-0.5-0.6-0.7-0.8-0.9-1.0, OFF, Accuracy ±15%				
	Tripping time (s)	0.1-0.2-0.3-0.4, Accuracy ±15%				

● Overload protection and tripping time setting
— Current setting value Ir, the user can adjust the range according to the ↑ and ↓ buttons on the panel, the range is (0.4~1.0) In, and the tripping time Tr is at the status of 6Ir, which can be adjusted according to user needs.
● Short circuit short-time protection and delay setting
—The current setting value (Isd) can be adjusted according to user needs, with an "OFF" option to disable the function. The short-time delay (Tsd) can also be adjusted to user specifications.
● Short circuit instantaneous protection setting
—The current setting value (Ii) can be adjusted according to the user's needs, and the function can be disabled using the "OFF" option.
● Neutral line protection feature setting
—For the four-pole circuit breaker, the neutral line protection (current setting value IrN) can be adjusted within the range of 0.5In, 1In, or OFF, based on user preferences. The "OFF" position indicates that the N pole protection is disabled.
● Earth fault protection
The earth fault setting (Ig) can be adjusted according to user needs. Selecting "OFF" disables the function entirely.

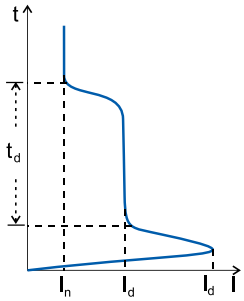

Motor starting Current curve

5.2 Protection for motor

5.2.1 Motor starting characteristics
Currently, most motors are three-phase asynchronous induction motors, with many employing direct start, where electric energy directly initiates motor operation without restrictions — also known as full-voltage start. During starting, asynchronous motors experience a high initial current, typically 4 to 7 times their rated current. This surge occurs because the motor possesses inertia, preventing immediate rotor speed adjustment to rated levels upon start. Consequently, the relative rotational speed between the stator's rotating magnetic field (slightly higher than rated speed) and the rotor is significant. This rapid speed differential causes the rotor winding to cut through the stator magnetic field swiftly, generating a substantial current. Simultaneously, the strong current induced in the rotor's magnetic field further induces current in the stator winding, leading to a rapid increase in overall current.
Startup parameter
Rated current (In): current value of the motor under rated operation
Starting current (Id): The current when the motor starts, its magnitude varies with different conditions, the average value is 7.2×In
Start peak current (Id): Transient current during the first two half-waves after the motor is powered on, typically 14 × In
Start-up time (td): generally 0.5~20s, which refers to the time when the motor has starting current
Direct startup impact on the protection device
In circuit breakers equipped with magnetic protection, an incorrectly setting for the magnetic trip unit can cause the breaker to mistake the motor's starting current for a short-circuit, leading to nuisance trips. Similarly, independent thermal overload relays can trip due to heat generated by the motor's large starting current. Contactors used for electric or regenerative braking of the motor need to handle interruptions during the starting phase and typically require derating to prevent protection device malfunctions.

To ensure proper operation:

a.The inverse time characteristic curve of the in dependent thermal overload relay should be entirely above the motor's starting currenr.
b. The short-circuit trip setting of the circuit breaker with magnetic protection must exceed the peak starting current of the motor.
5.2.2 Protection solution
The NM8N Series offers start-up, control and protection solutions for two three-phase asynchronous motors:

Three-component solution

Magnetic type circuit breaker + Contactor + Thermal overload relay

(Note: Magnetic type is chosen to be consistent with the earlier pages)

In this system, the magnetic type circuit breaker is used for short circuit protection, the contactor is used for motor operation, and the thermal overload relay provides overload, phase loss, and phase unbalance protection.

1) Magnetic type release M

The electromagnetic protection circuit breaker has a current range of 125~800A, an adjustable range of 9~14In and an accuracy of 20%. It is especially suitable for use in the classic threecomponent protection solution.

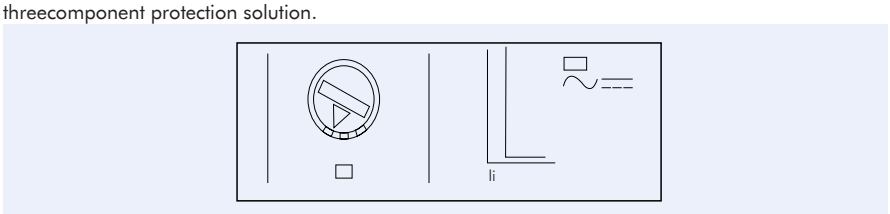

Magnetic M	125	250	400	630	800
Pole	3P/4P	3P/4P	3P/4P	3P/4P	3P/4P
Short circuit instantaneous protection					
Setting current (A) $I_i=I_nx$	12	9-10-11-12-13-14			
Accuracy	±20%				
N pole protection					
Setting current (A) $I_{iN}=I_nx$	12	The same with the other three-phase poles.I_i			
Accuracy	±20%				

Two-component solution

Integrated protection electronic circuit breaker + contactor

In the two-component solution, there is no need for a thermal overload relay. The integrated protection electronic circuit breaker provides overload, phase loss, phase unbalance, and short circuit protection. This circuit breaker offers high tripping precision and reliable operation. The two-component solution, comprising of a circuit breaker and a contactor, saves installation time and is unaffected by ambient temperature.

2) Integrated protection: Basic electronic type release for motor protection ENM

The ENM electronic trip unit allows for tighter tolerance trip times, as detailed in the table below.

Electronic type ENM		250	400	630	800
Overload long-time delay protection	Setting current $I_r=I_nx$	0.4-0.5-0.6-0.7-0.8-0.9-1.0, OFF			
	7.2I_r Tripping time I_r(s)	4、8、16, Accuracy ±10%	4、8、16、24, Accuracy ±15%		
	Tripping level	5、10、20	5、10、20、30		
Short circuit short-time delay protection	Setting current $I_{sd}=I_rx$	5-6-8-9-10-11-12, OFF, Accuracy ±15%			
	Tripping time T_{sd}(ms)	100, Accuracy ±40			
Short circuit instantaneous protection	Setting current $I_r=I_nx$	15[1]			
	Max. trpping time (ms)	60			
Phase unbalance/Phase failure I_{unbal}		30%-40%-50%-60%-70%-80%-90% (Phase failure)-OFF			
Max. trip time of phase imbalance (s)		4-6-8-10, Accuracy ±20%			
Tripping time of phase failure (s)		0.25, Accuracy ±20%			
Neutral line protection	Setting current	$I_{rN}=(0.5,1)xI_n$;$I_{sdN}=(5-6-8-9-10-11-12)I_{rN}$ $I_{iN}=15I_{rN}$, OFF			
	Tripping time	The same with the other three-phase poles			

Note: [1] Setting current $I_{sd}<I_i$ (within tolerance).

3) The EMM electronic release offers all the protection functions of the ENM release, with additional ground fault and locked-rotor protection. It has parameter setting functions., provides real-time current display, protection parameter information display and fault information display.

Electronic type EMM		250	400	630	800
Overload long-time delay protection	Protection current $I_r=I_nx$	0.4~1.0, Stepping , OFF			
	7.2I_r Tripping time T_r(s)	4、8、16, Accuracy ±10%	4、8、16、24, Accuracy ±10%		
	Tripping level	5、10、20	5、10、20、30		
Short circuit short-time delay protection	Setting current $I_{sd}=I_rx$	4~12, Stepping1A , OFF, Accuracy ±15%			
	Tripping time T_{sd}(ms)	100, Accuracy ±40			
Short circuit instantaneous protection	Protection current $I_r=I_nx$	15[1]			
	Max. trpping time (ms)	60			
Earth falt protection	Protection current $I_g=I_nx$	0.4-0.5-0.6-0.7-0.8-0.9-1.0 , OFF, Accuracy ±15%			
	Tripping time (s)	0.1-0.2-0.3-0.4, Accuracy ±20% or 40ms(higher value will be selected)			
Phase unbalance/Phase failure I_{unbal}		30%-40%-50%-60%-70%-80%-90% (Phase failure)-OFF			
Max. trip time of phase imbalance (s)		4-6-8-10, Accuracy ±10%			
Tripping time of phase failure (s)		0.25, Accuracy ±20%			
Locked-rotor current I_{jam}		(3~10)I_r , Stepping1A, OFF(Defalut), Accuracy ±15%			
Tripping time T_{jam} (s)		1~30, Step size1s, Defalut 5, Accuracy ±10%			
Neutral line protection	Setting current	$I_{rN}=(0.5,1)xI_n$, OFF;$I_{sdN}=(4~12)I_{rN}$,$I_{iN}=15I_{rN}$, OFF			
	Tripping time	The same with the other three-phase poles			

Note: [1] Setting current $I_{sd}<I_i$ (within tolerance).

6. Tripping curve

6.1 Thermal-magnetic type for power distribution

NM8N-125(16A,20A,25A,32A)

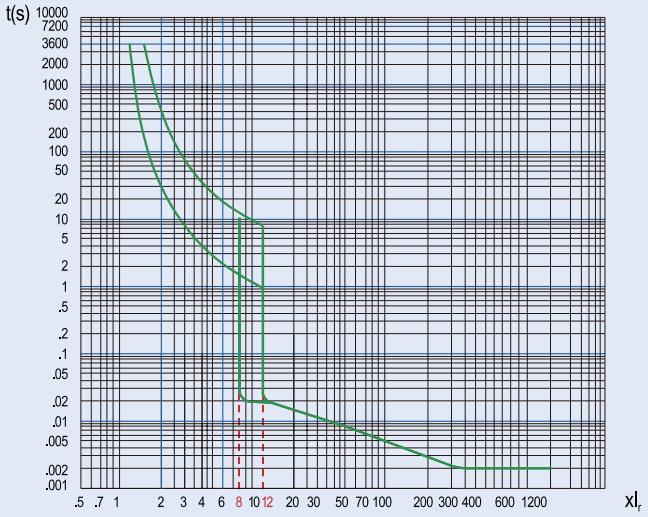

NM8N-125(40A,50A,63A)

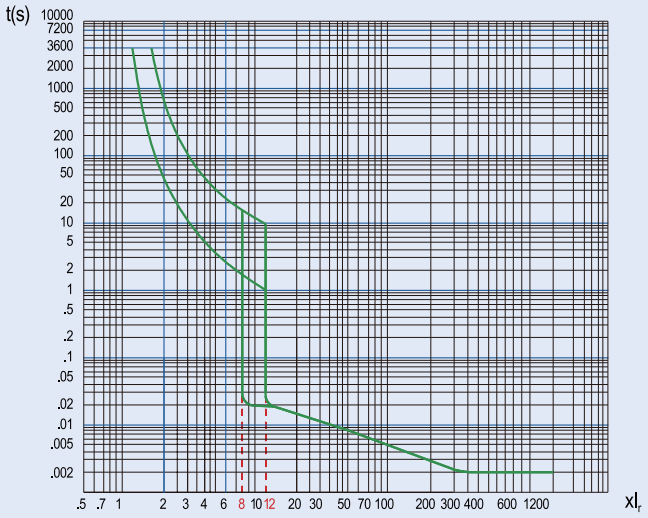

NM8N-125(80A,100A,125A)

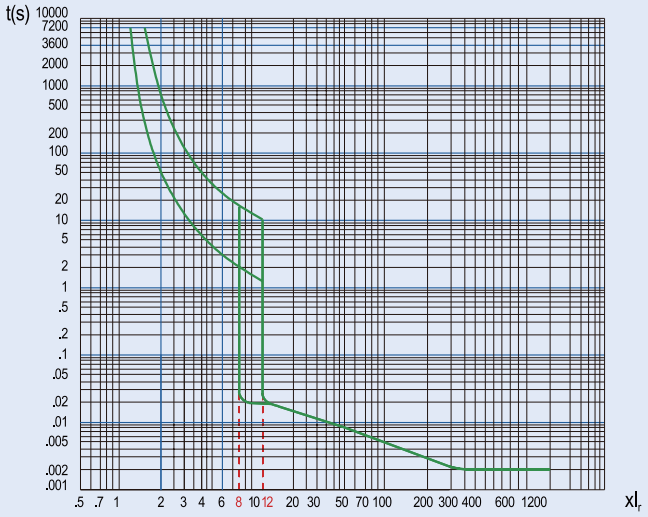

NM8N-250(125A,160A)

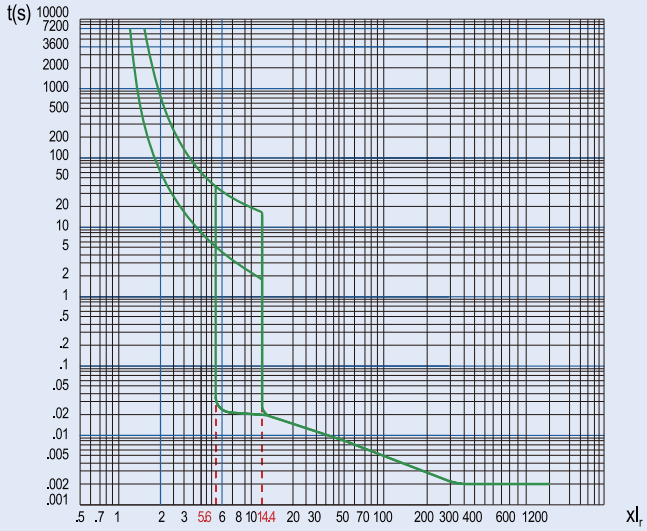

NM8N-250(180A)

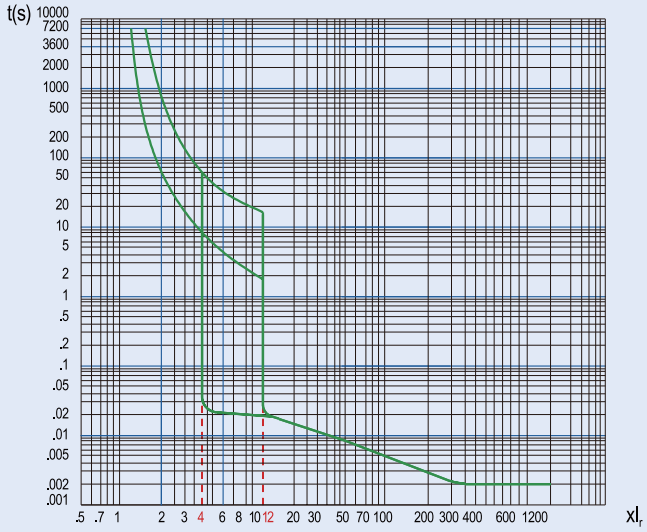

NM8N-250(200A,225A,250A)

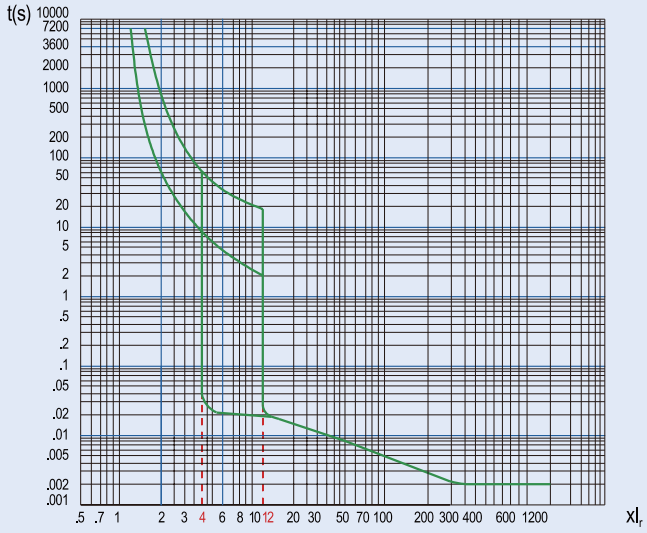

NM8N-400(250A~400A)

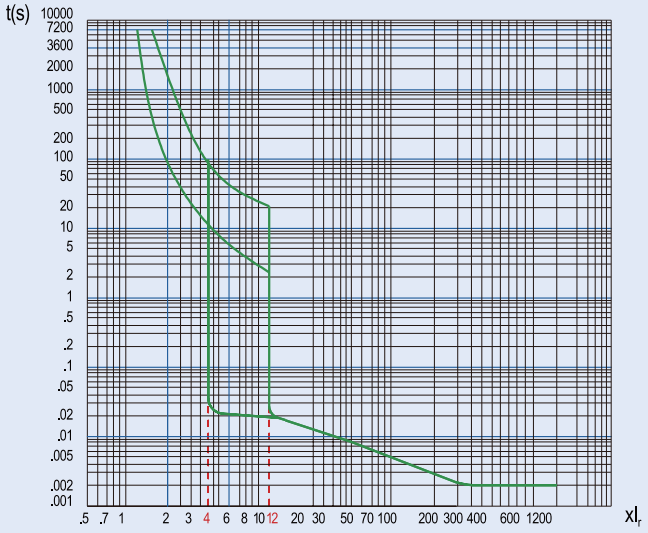

NM8N-630(400A~500A)

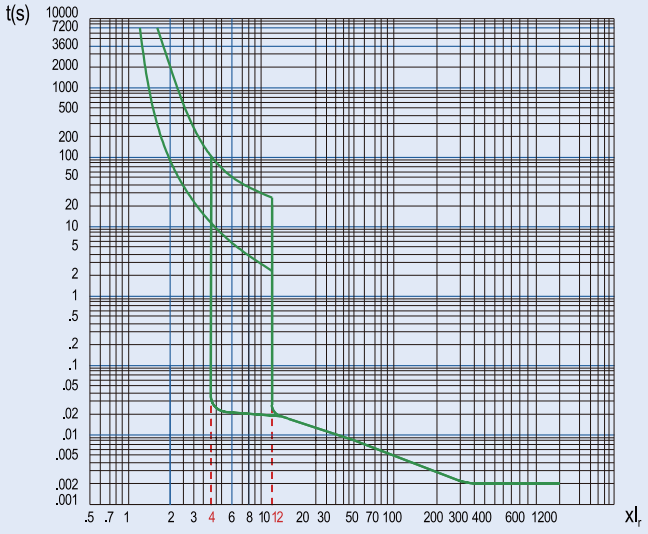

NM8N-800(500A~800A)

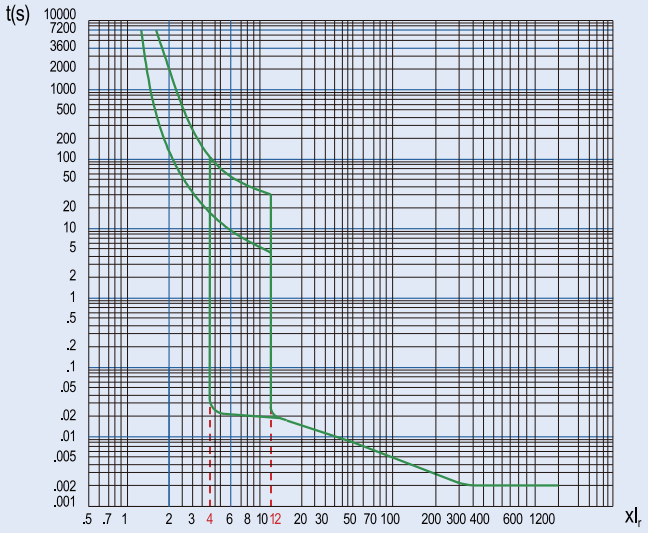

NM8N-1600(800A~1600A)

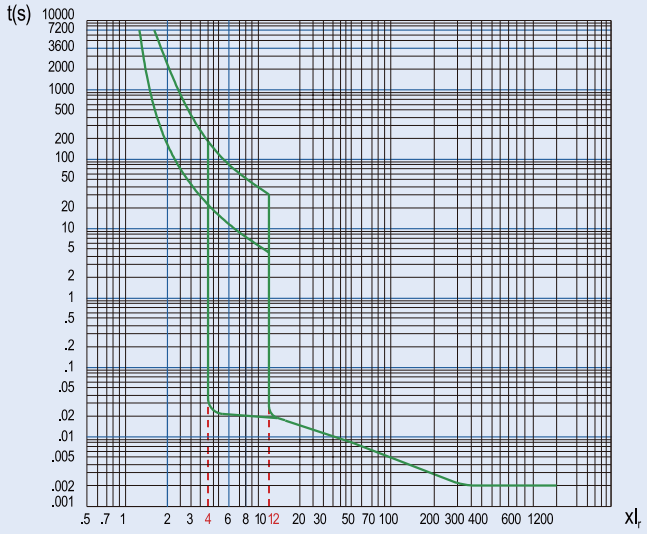

6.2 Magnetic type for motor protection

NM8N-125(16A~125A)

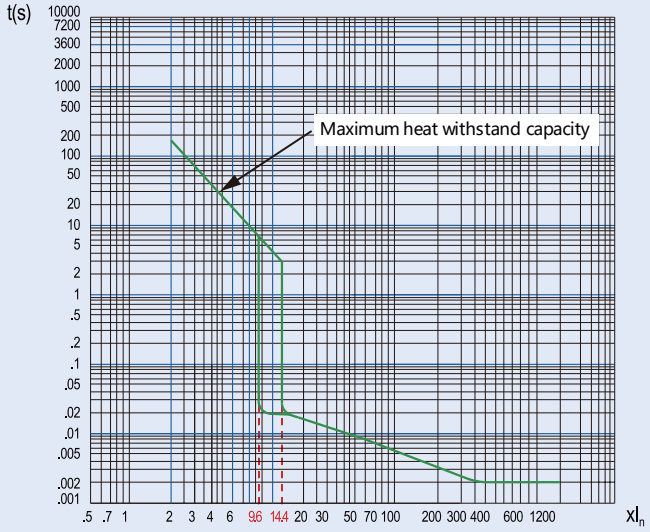

NM8N-250(125A~250A)

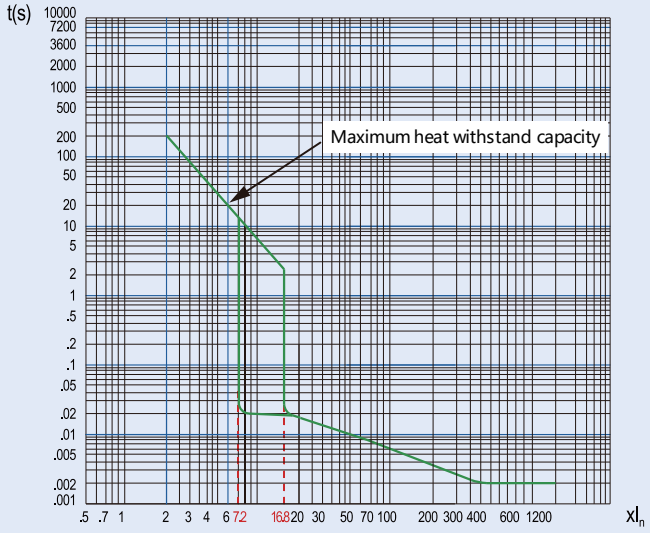

NM8N-400(250A~400A)

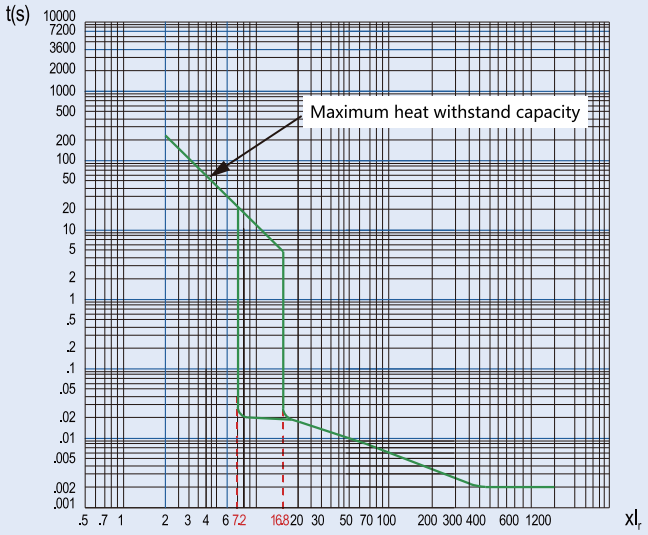

NM8N-630(400A~500A)

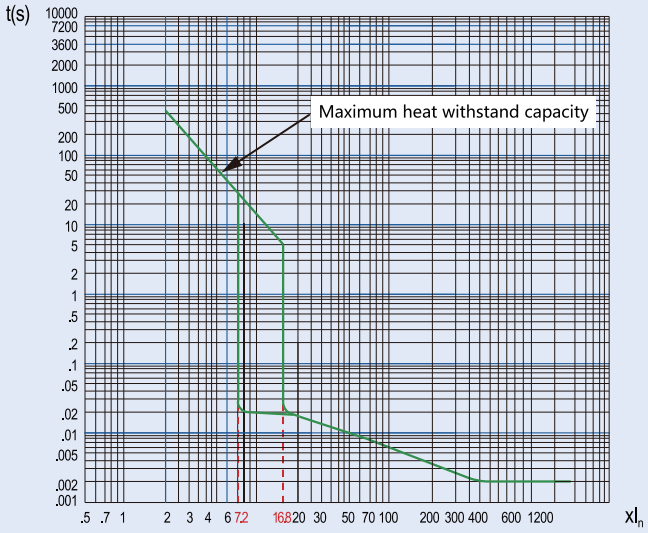

NM8N-800(500A~800A)

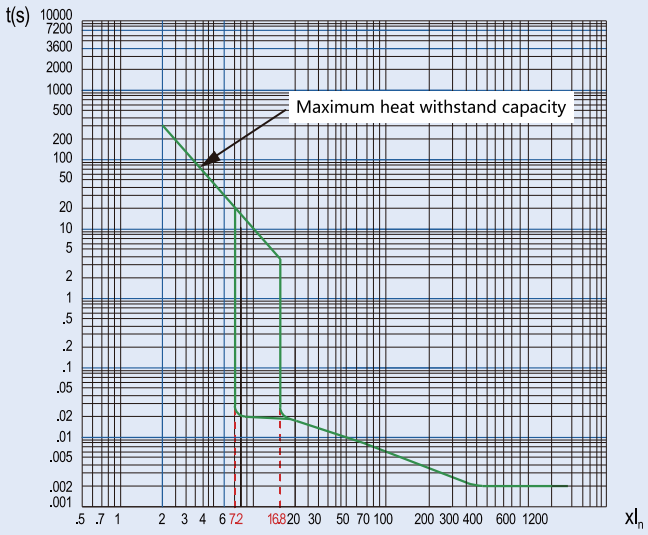

6.3 Electronic type for power distribution

EN Basic electronic type

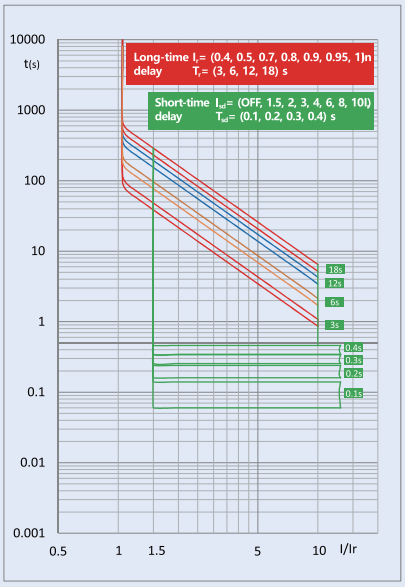

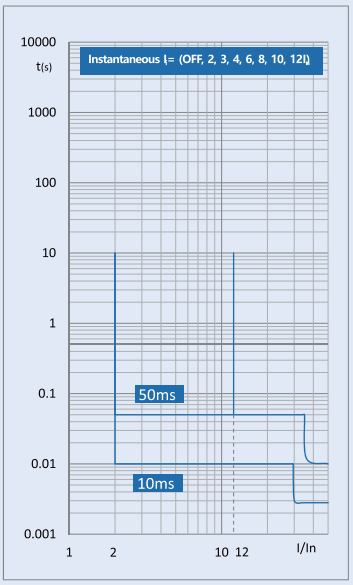

EM Standard electronic type

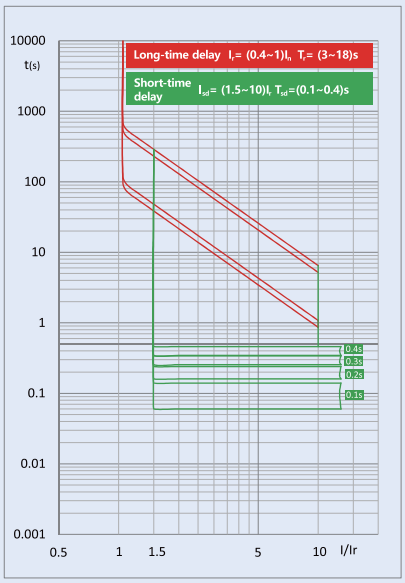

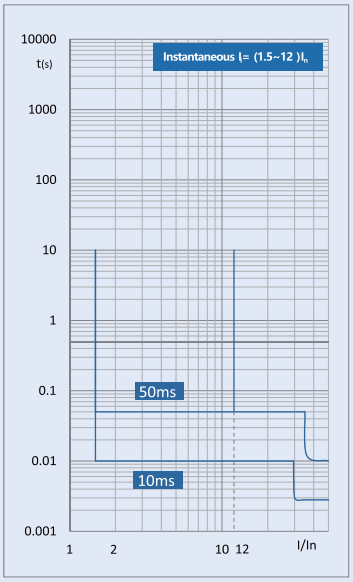

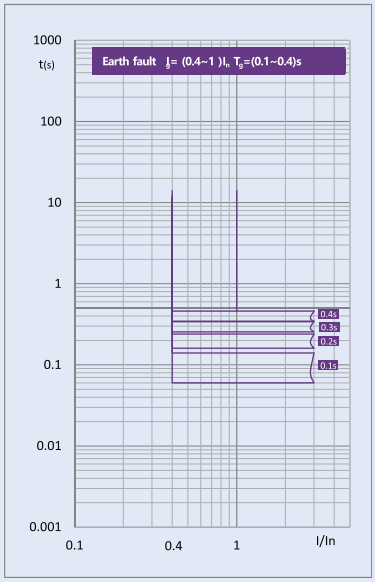

6.4 Electronic type for motor protection

ENM Basic electronic type

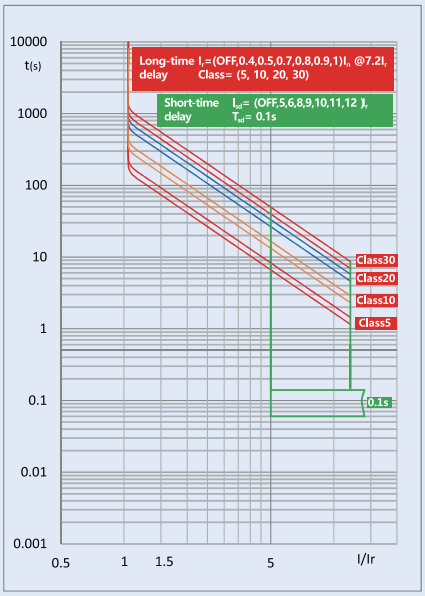

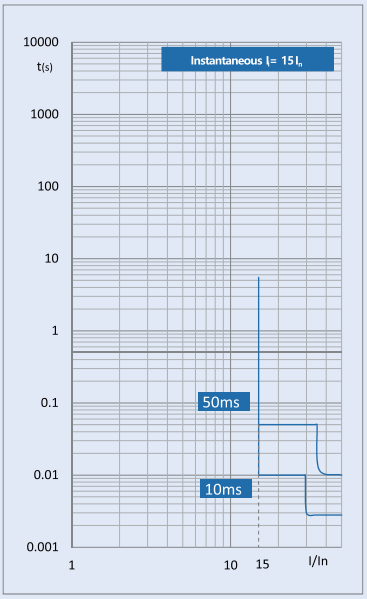

EMM Standard electronic type

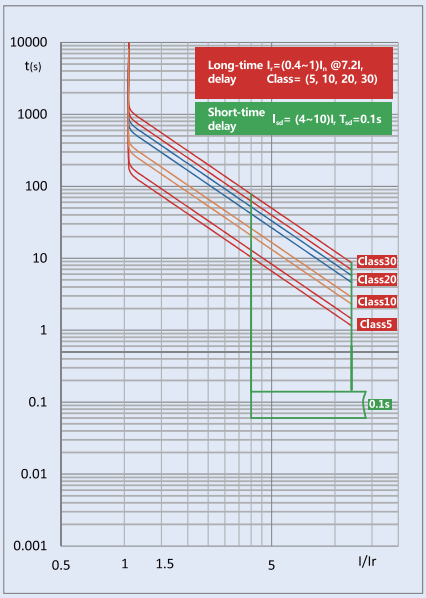

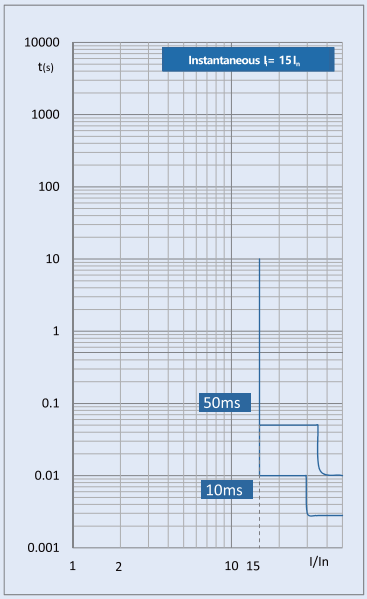

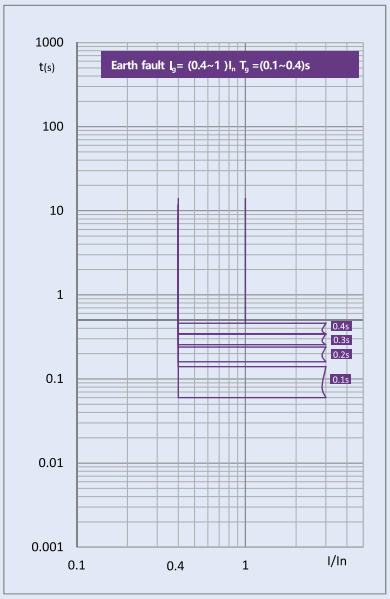

7. Mounting of circuit breaker

7.1 Modes of down-lead

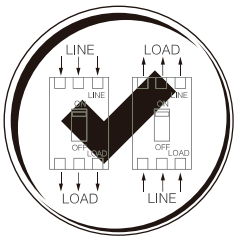

Incoming method

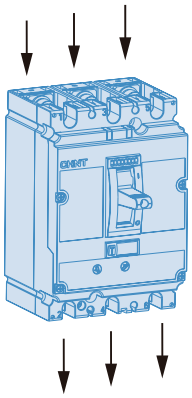

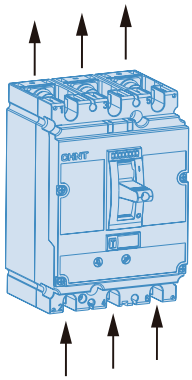

7.2 Modes of mounting

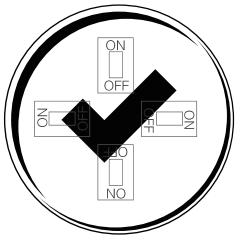

Modes of mounting

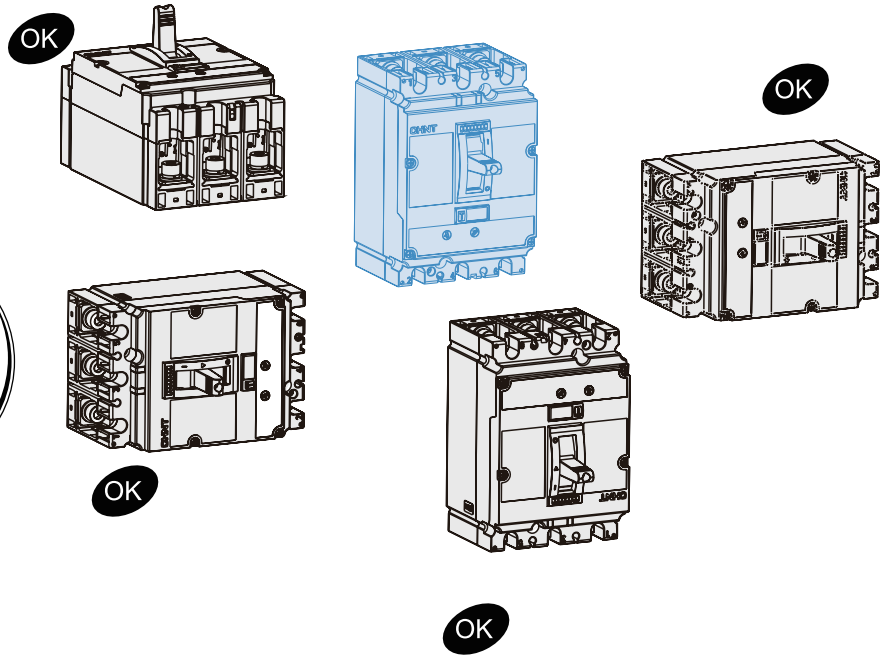

7.3 Safe distance

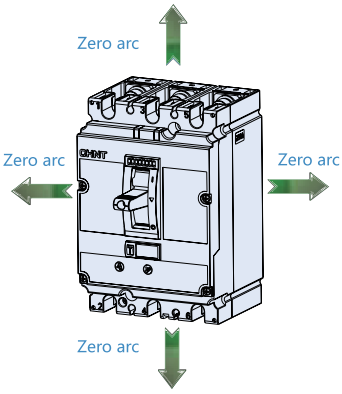

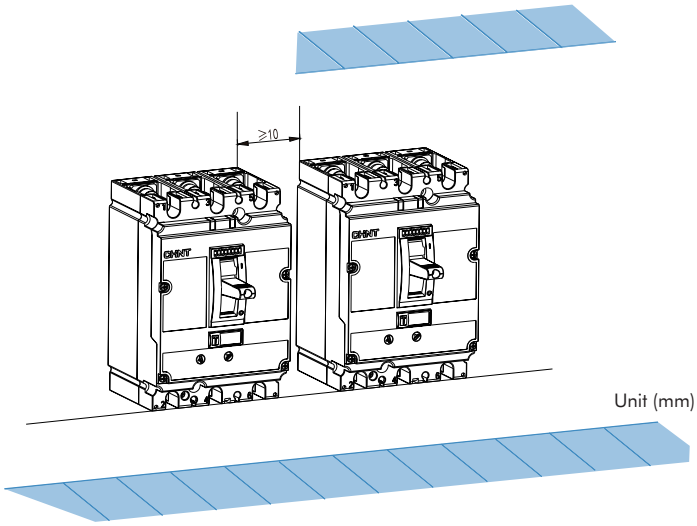

8. Overall and Mounting Dimensions

8.1 NM8N-125

NM8N-125 Front connection

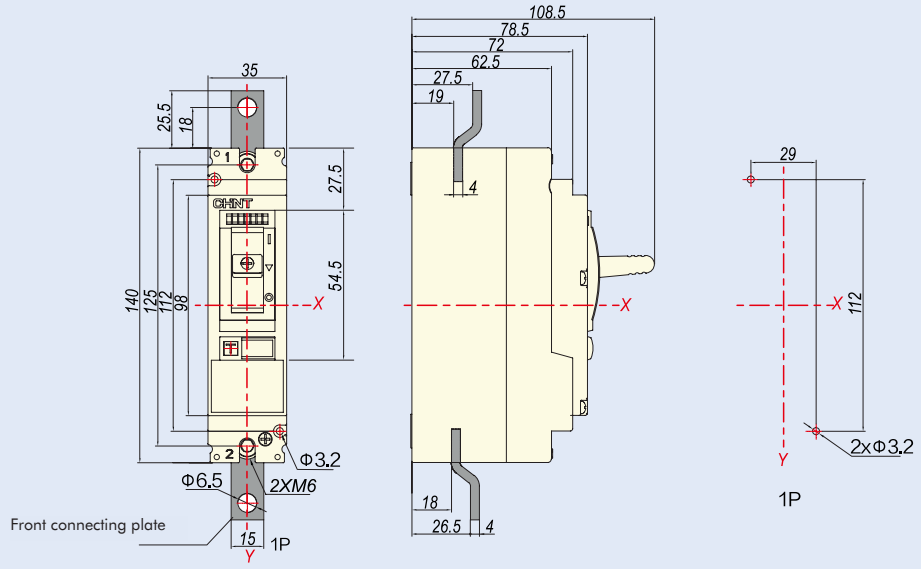

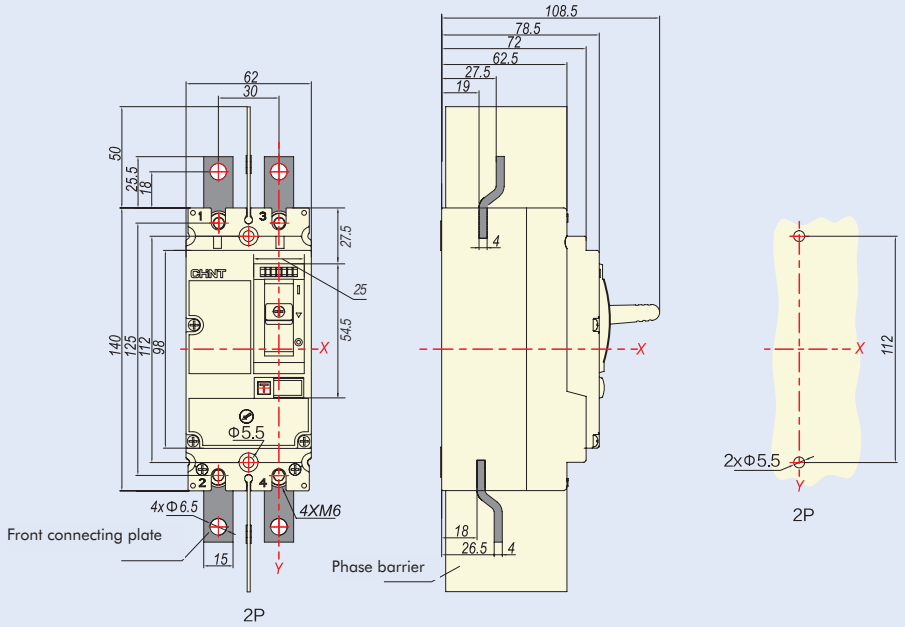

Unit (mm)

NM8N-125 Front connection (3P/4P)

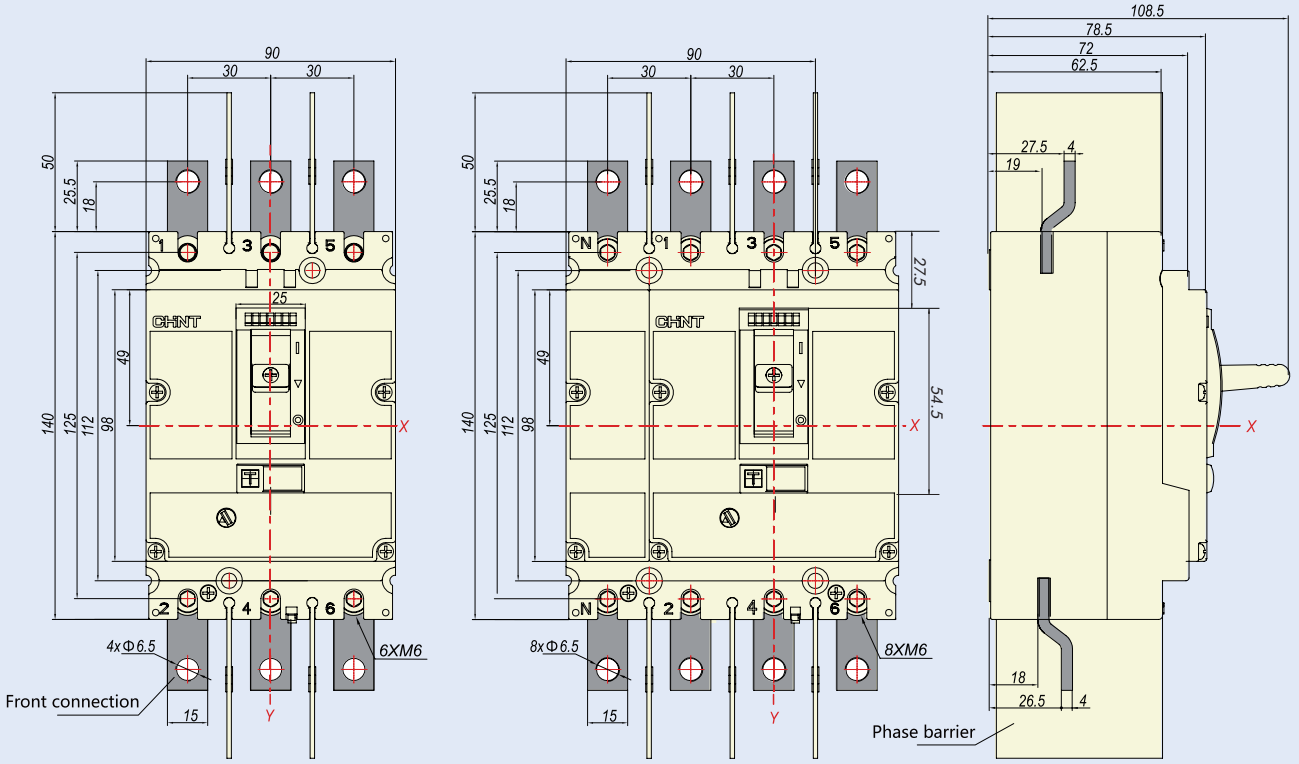

3P 4P

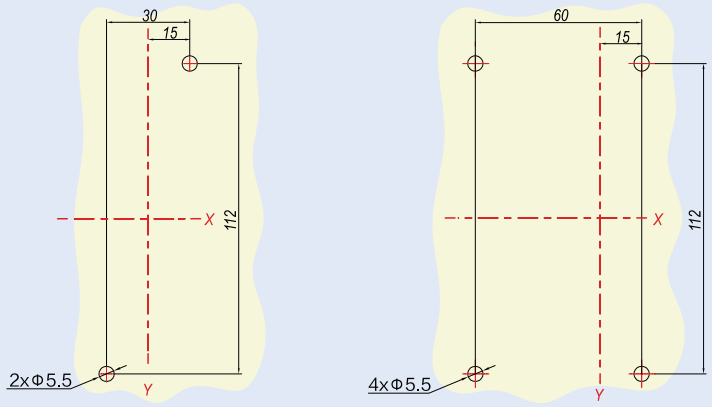

3P 4P

Unit (mm)

NM8N-125 Rear connection (1P/2P)

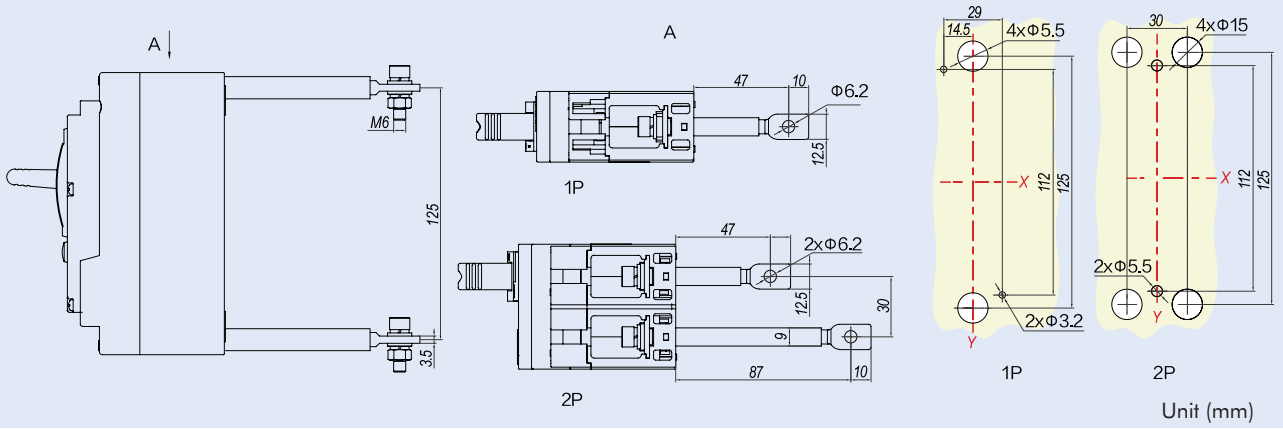

Unit (mm)

NM8N-125 Rear connection (3P/4P)

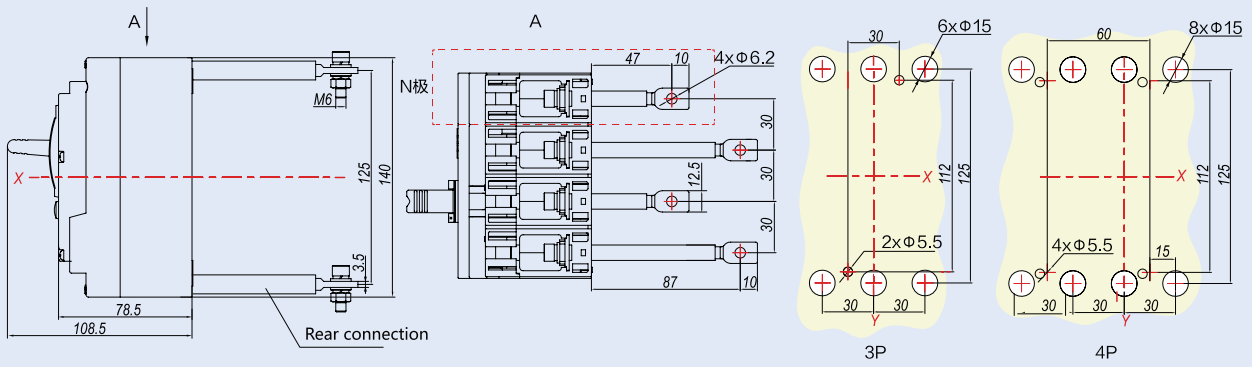

Unit (mm)

NM8N-125 Plug-in front connection

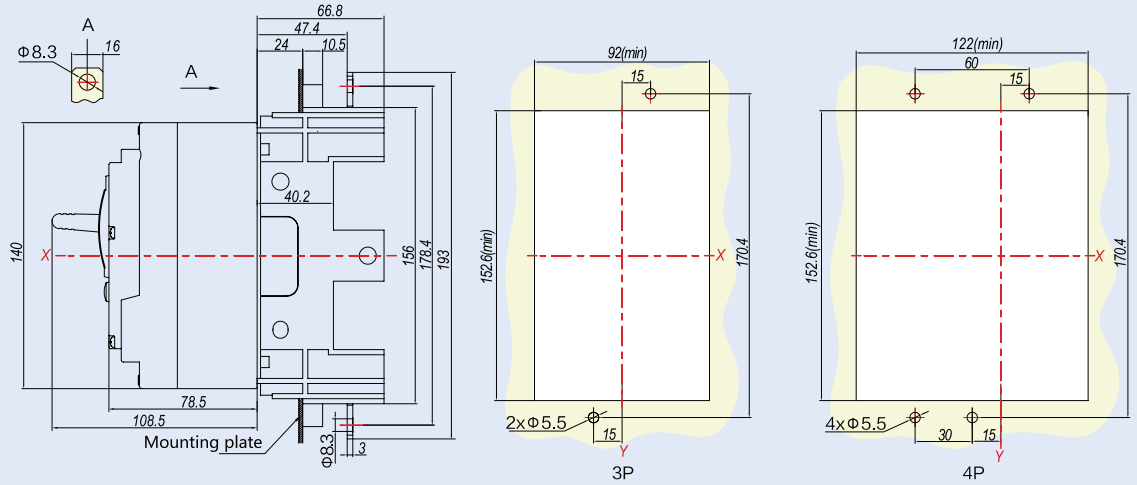

Unit (mm)

NM8N-125 Plug-in rear connection

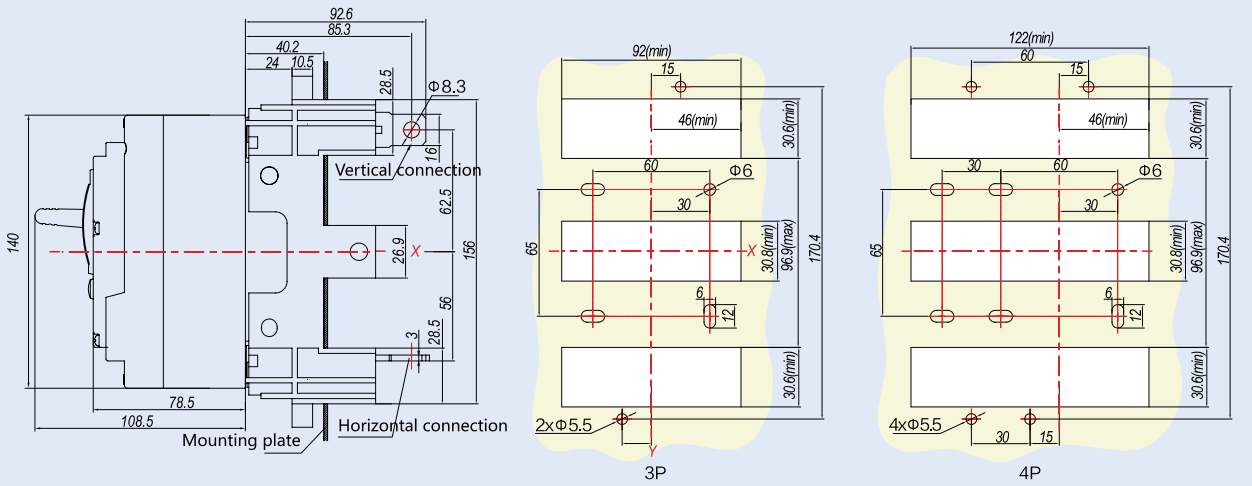

Unit (mm)

NM8N-125 DIN-rail mounting

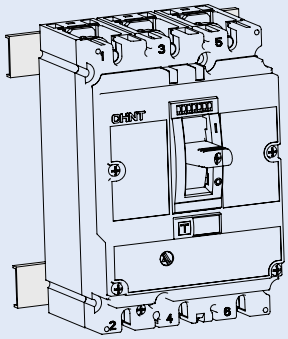

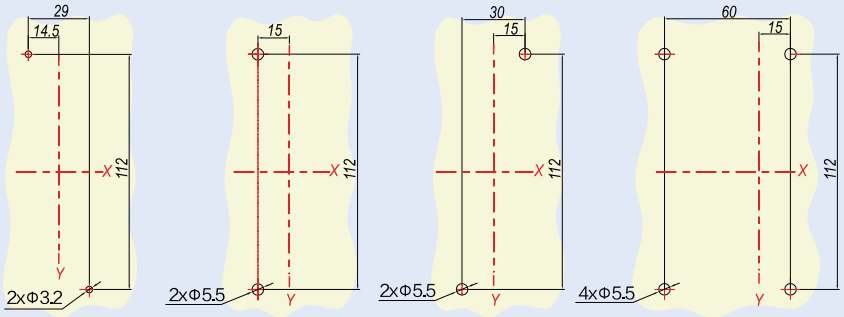

1P 2P 3P 4P

Unit (mm)

NM8N-125 DIN-rail mounting (DIN-rail adapter is needed)

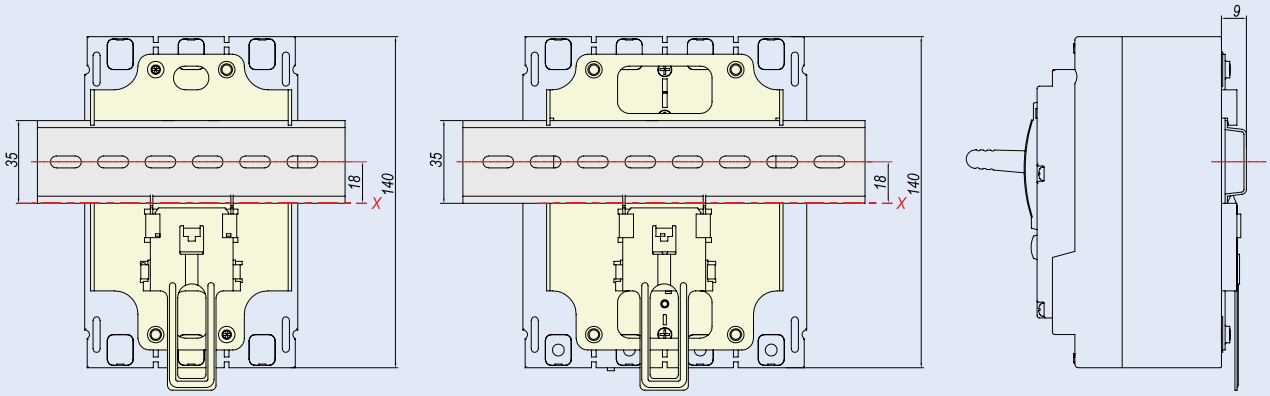

3P 4P

Unit (mm)

NM8N-125 Mechanical interlock

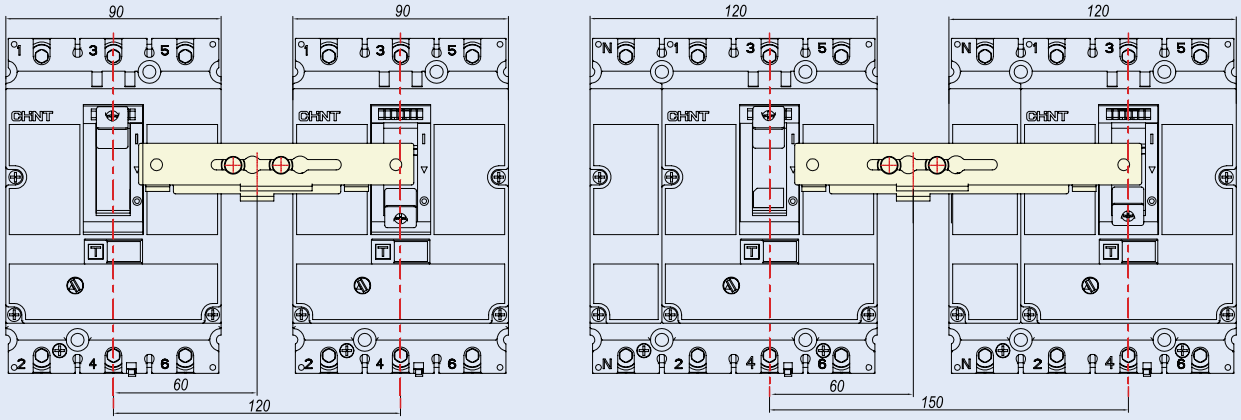

3P 4P

Unit (mm)

NM8N-125 Terminal cover

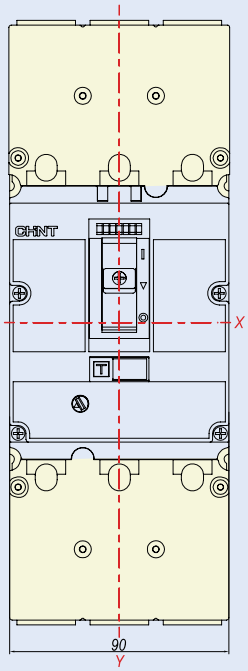

3P Long terminal cover

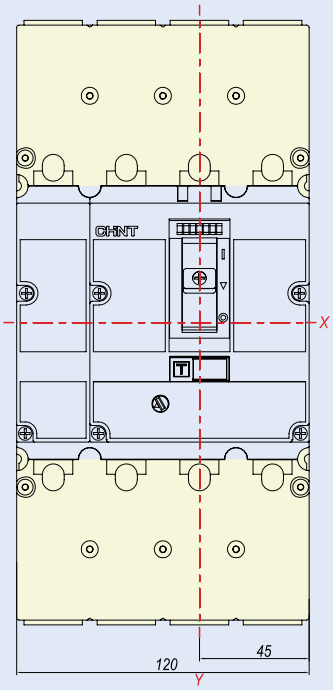

4P Long terminal cover

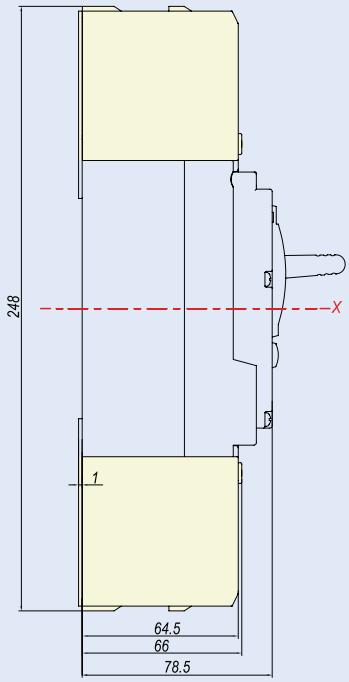

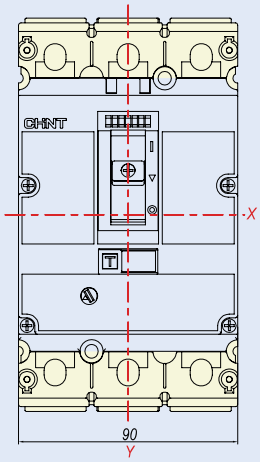

3P Short terminal cover

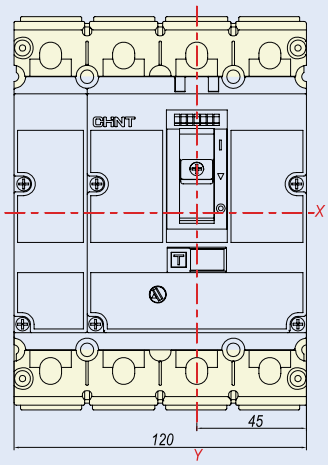

4P Short terminal cover

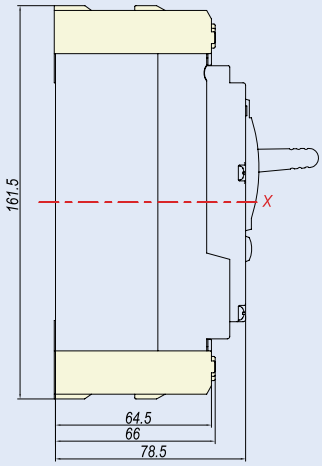

Unit (mm)

8.2 NM8N-250

NM8N-250 Front connection (1P/2P)

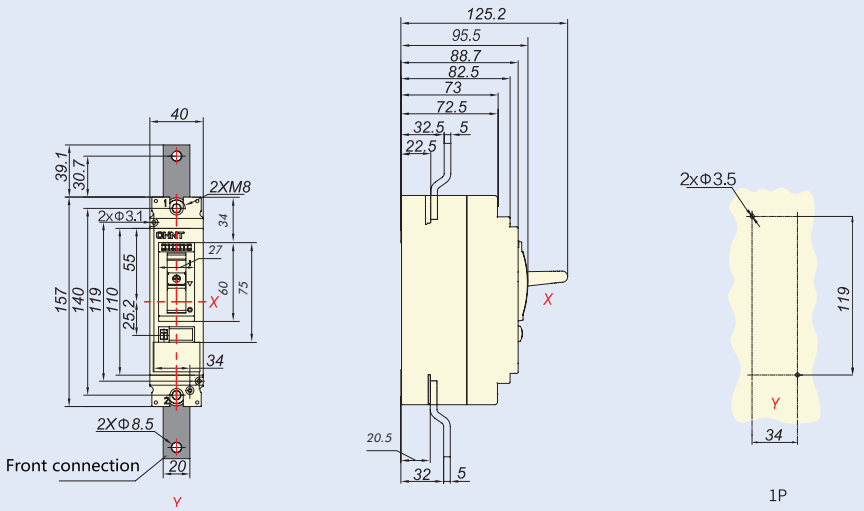

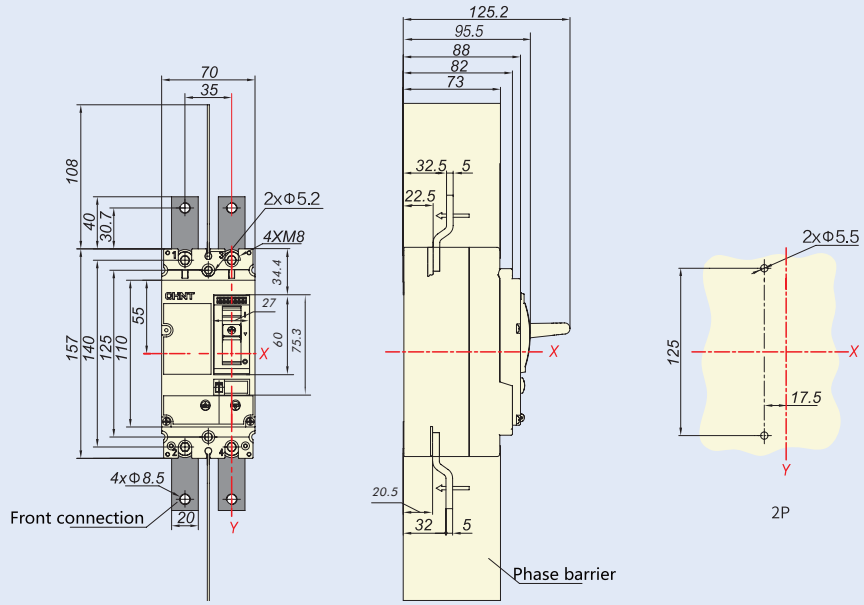

Unit (mm)

NM8N-250 Front connection (3P/4P)

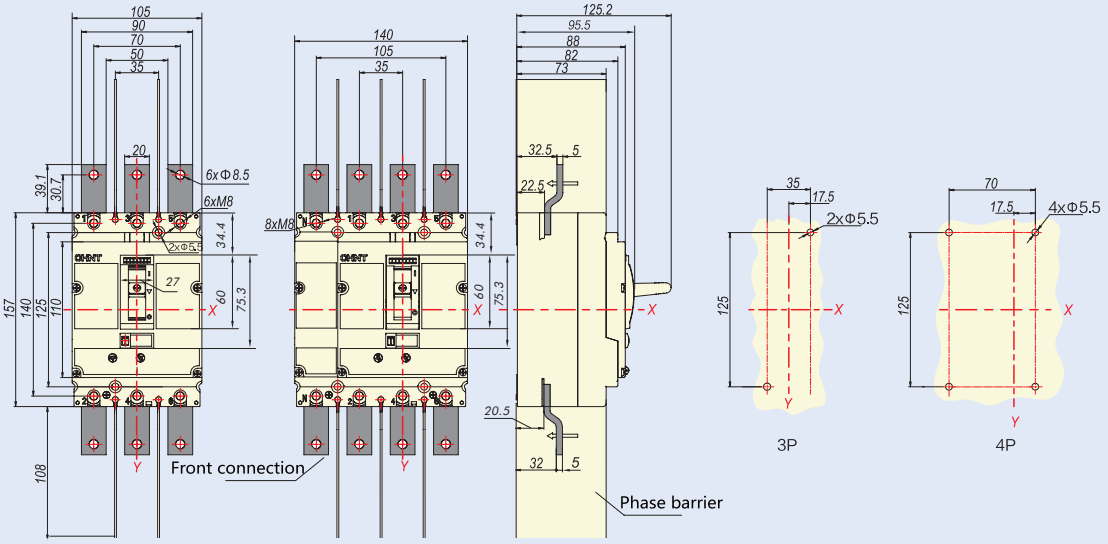

Unit (mm)

NM8N-250 Rear connection (1P/2P)

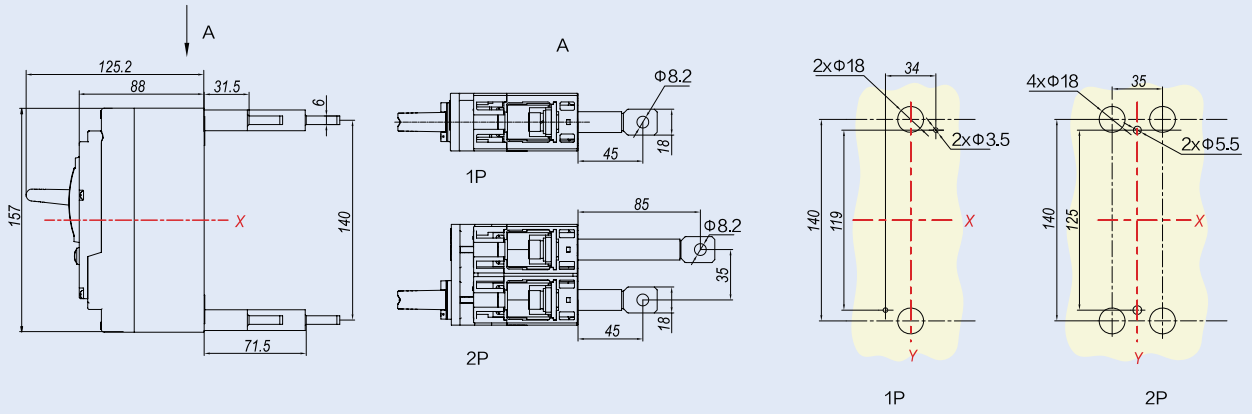

Unit (mm)

NM8N-250 Rear connection (3P/4P)

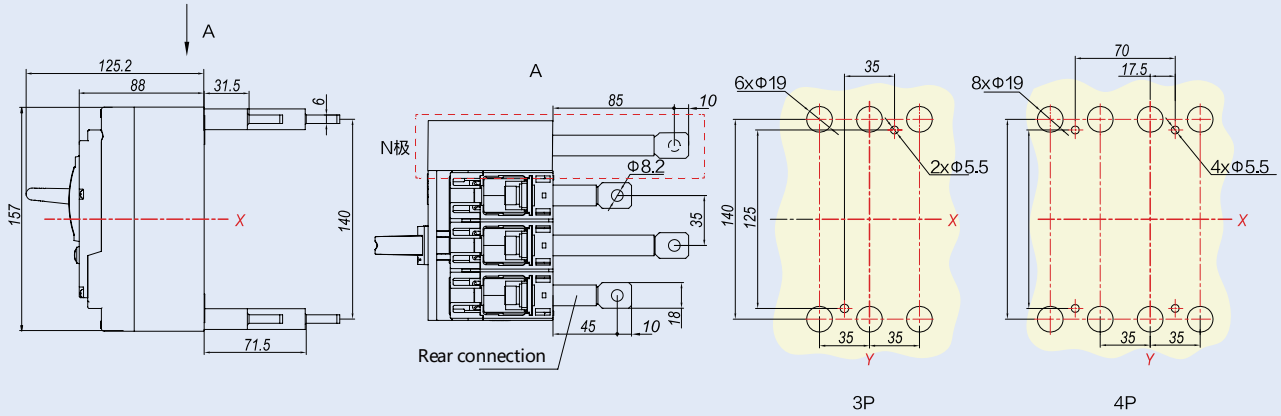

Unit (mm)

NM8N-250 Plug-in front connection

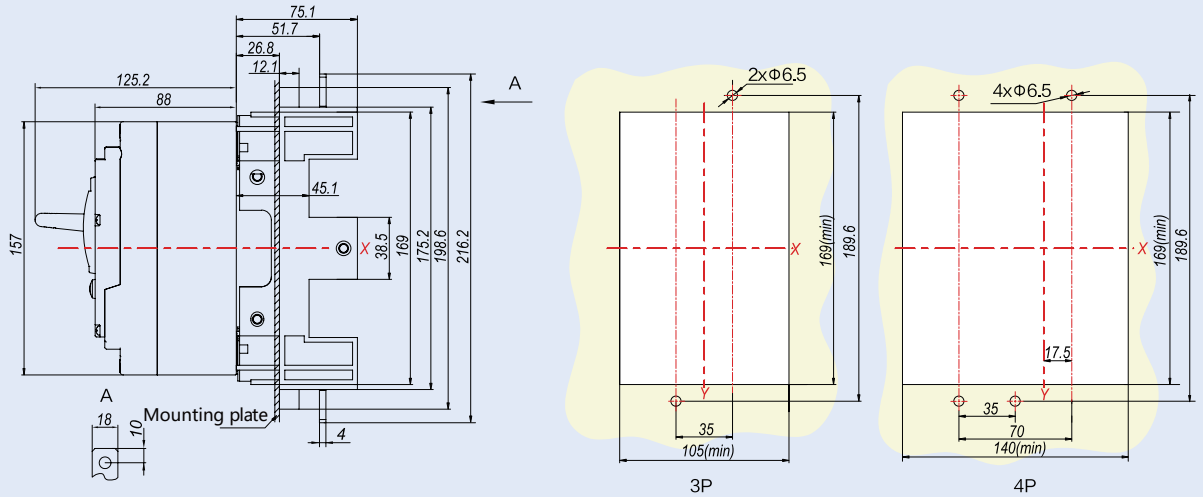

Unit (mm)

NM8N-250 Plug-in rear connection

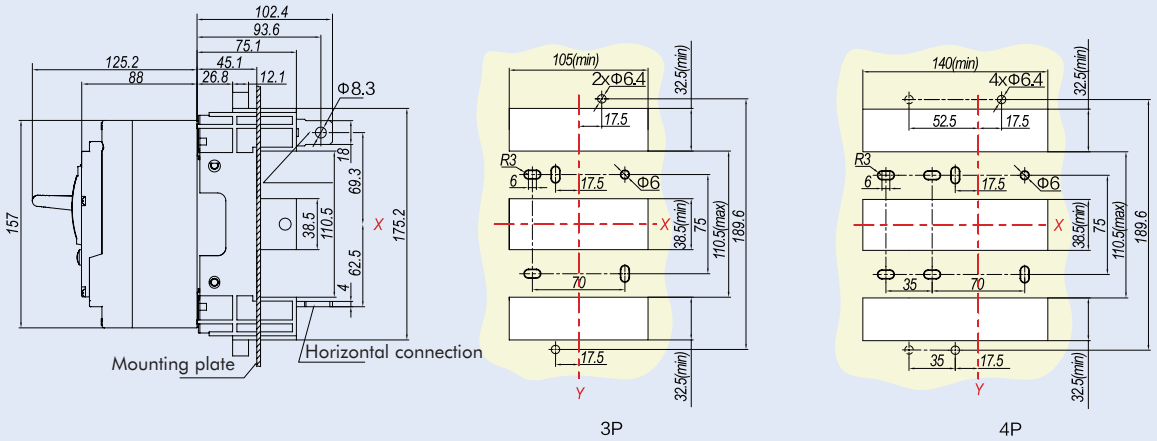

Unit (mm)

NM8N-250 DIN-rail mounting

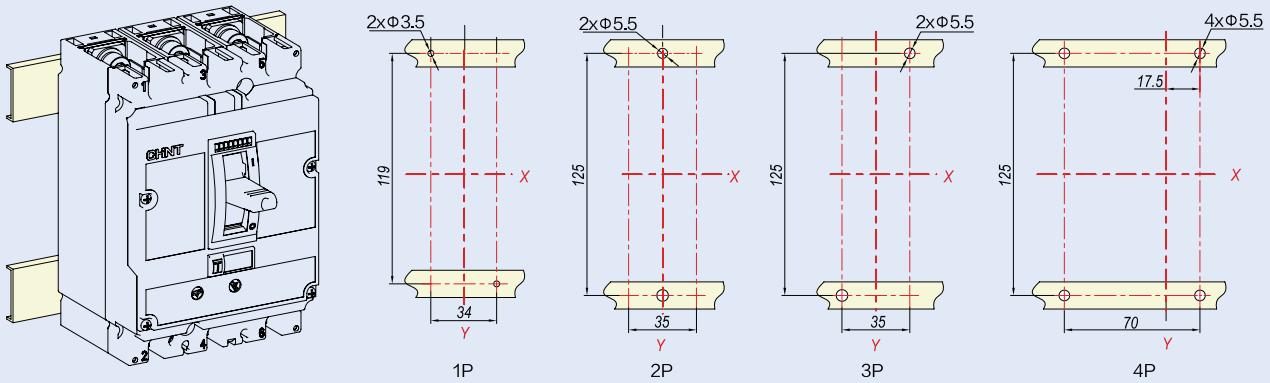

Unit (mm)

NM8N-250 DIN-rail mounting (DIN-rail adapter is needed)

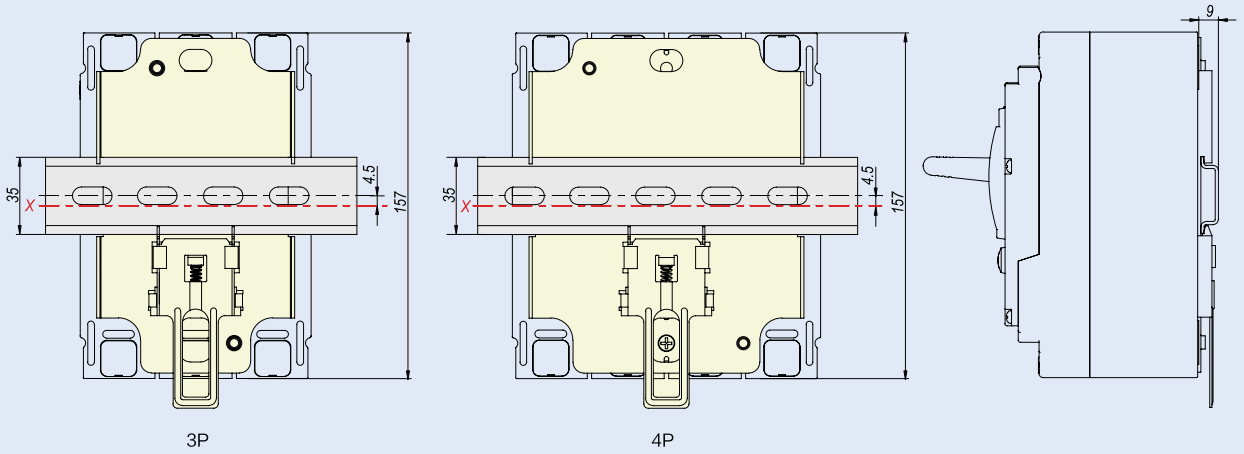

Unit (mm)

NM8N-250 Mechanical interlock

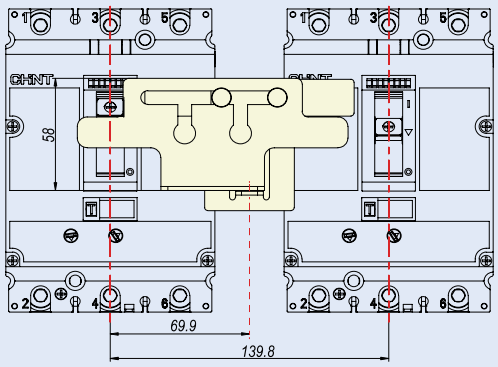

3P

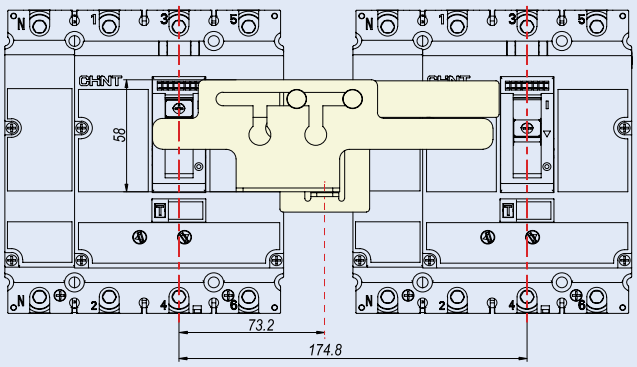

4P

Unit (mm)

NM8N-250 Terminal cover

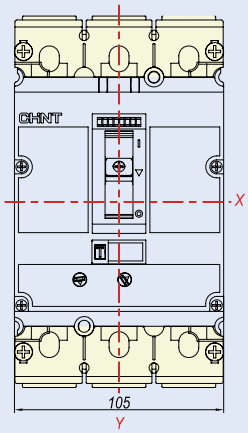

3P Short terminal cover

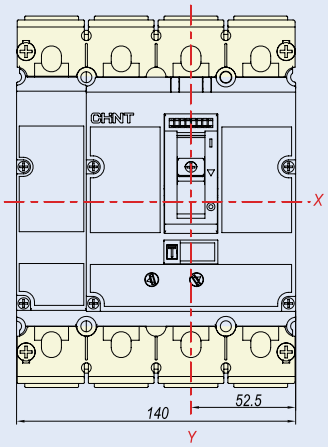

4P Short terminal cover

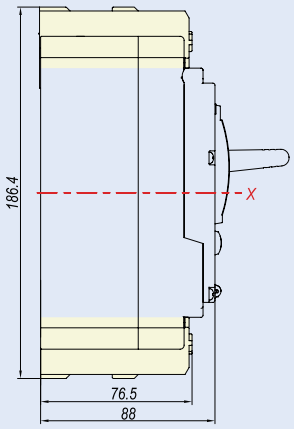

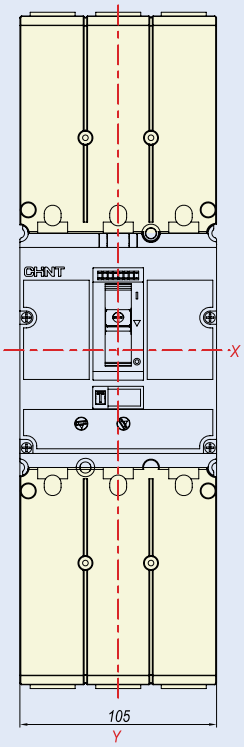

3P Long terminal cover

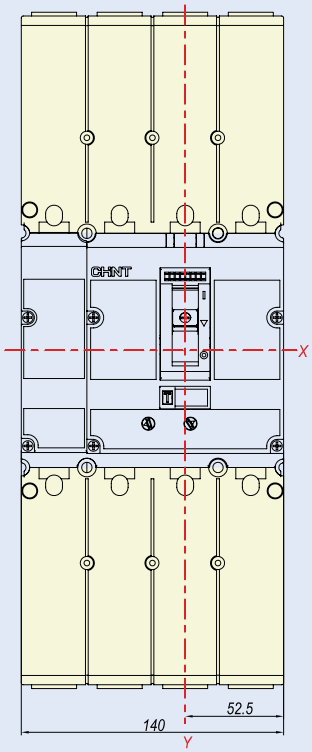

4P Long terminal cover

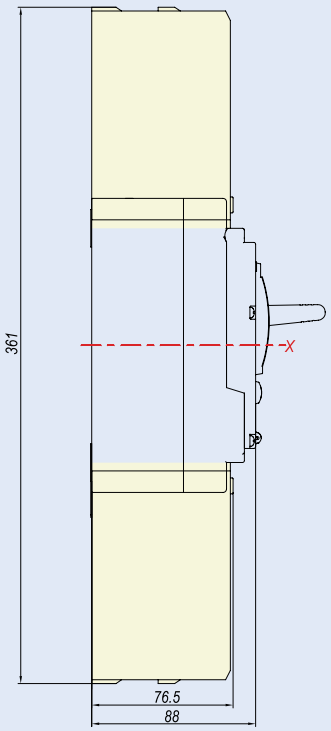

Unit (mm)

8.3 NM8N-400/630

NM8N-400/630 Front connection

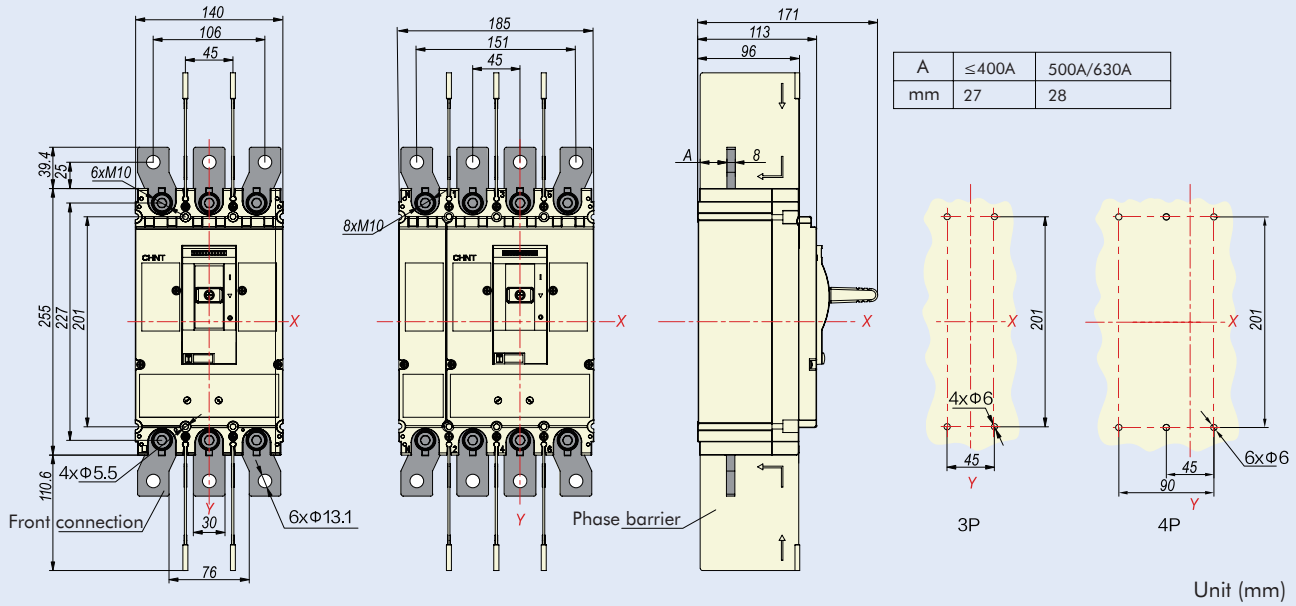

A	≤400A	500A/630A
mm	27	28

Unit (mm)

NM8N-400/630 Rear connection

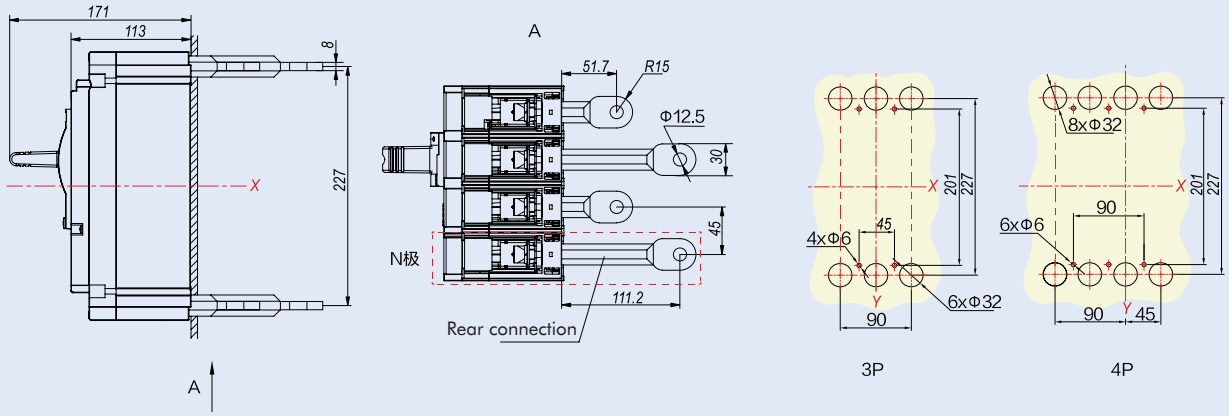

Unit (mm)

NM8N-400/630 Plug-in front connection

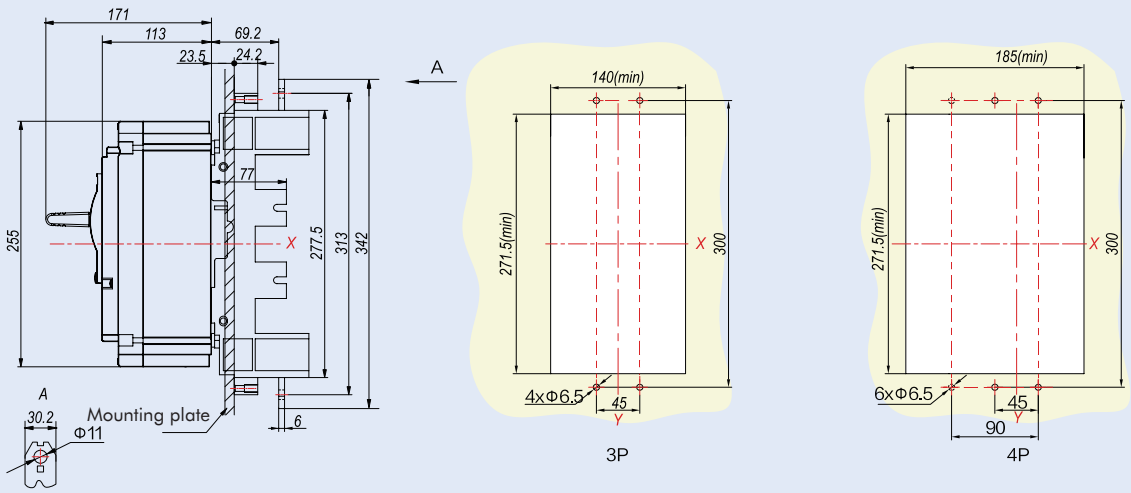

Unit (mm)

NM8N-400/630 Plug-in rear connection

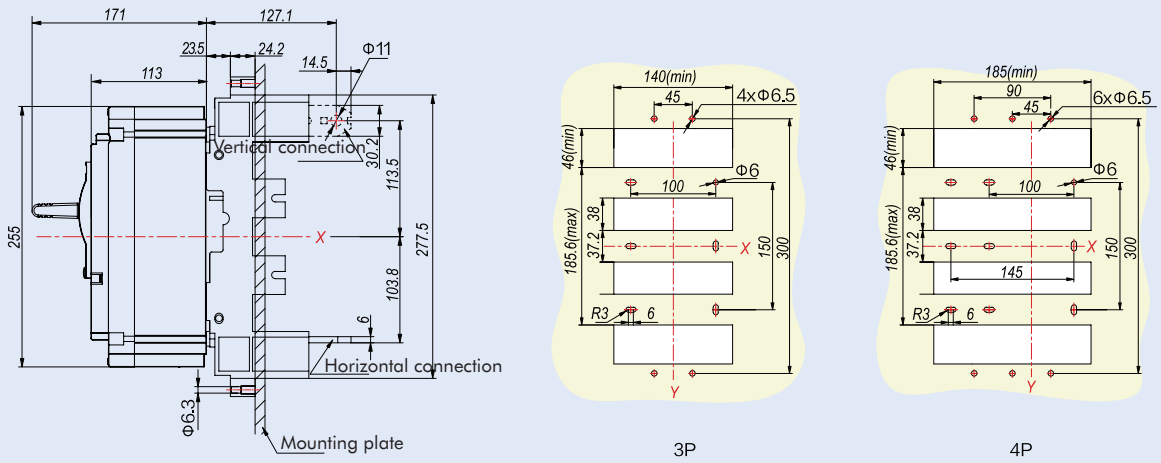

3P 4P

Unit (mm)

NM8N-400/630 DIN-rail mounting

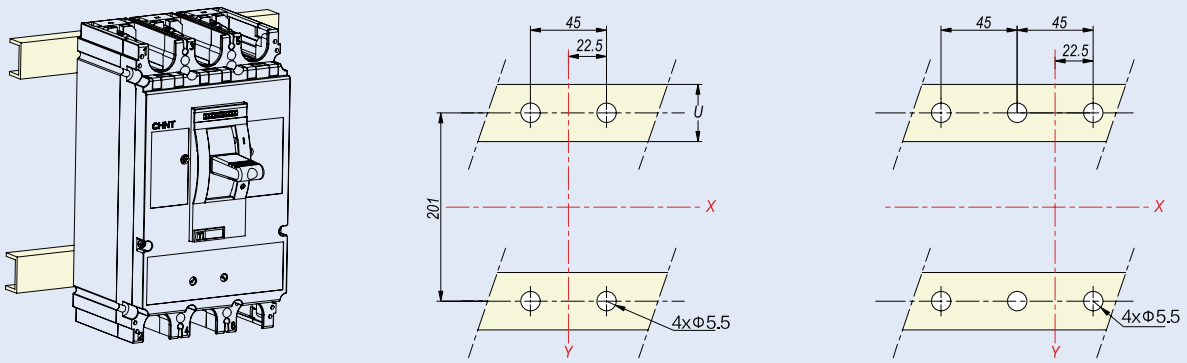

3P 4P

Unit (mm)

NM8N-400/630 Mechanical interlock

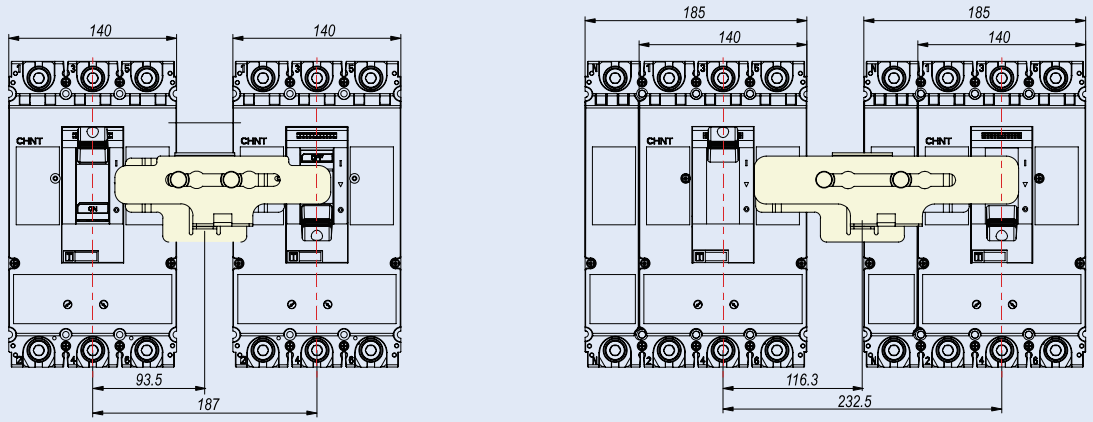

3P 4P

Unit (mm)

NM8N-400/630 Long terminal cover

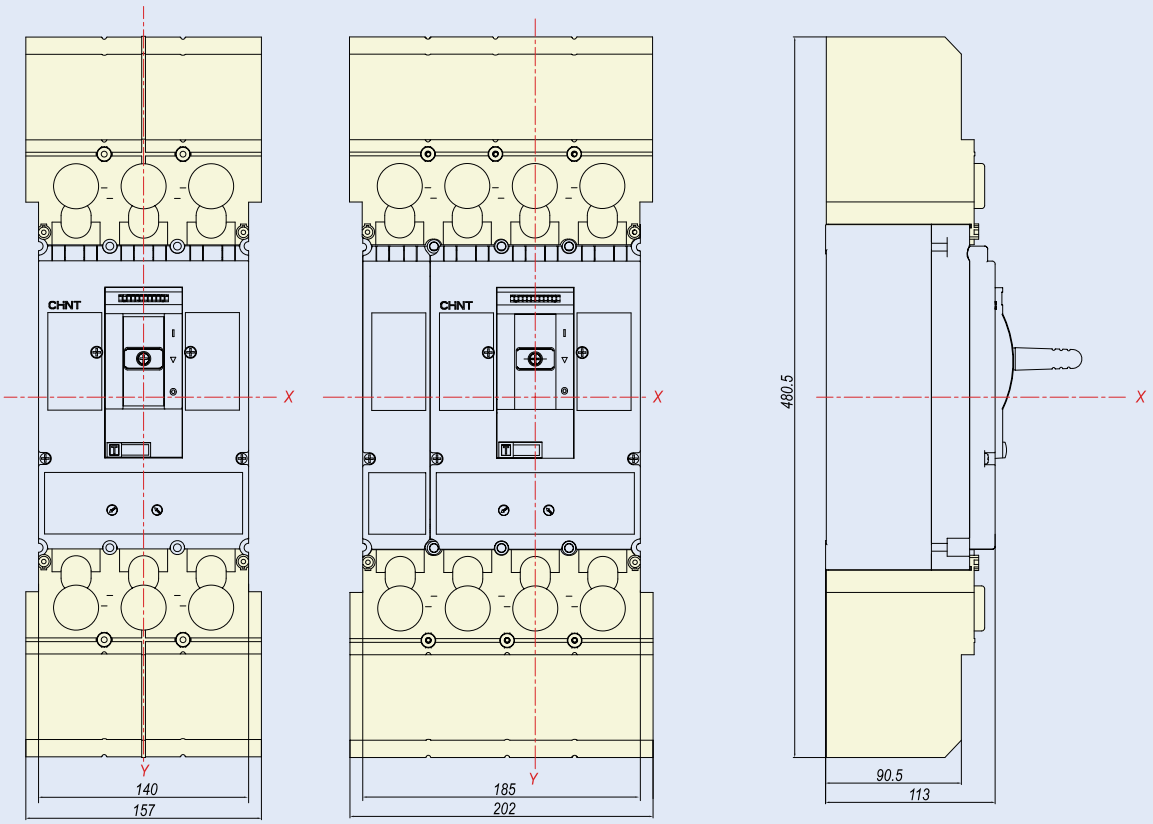

Unit (mm)

NM8N-400/630 Short terminal cover

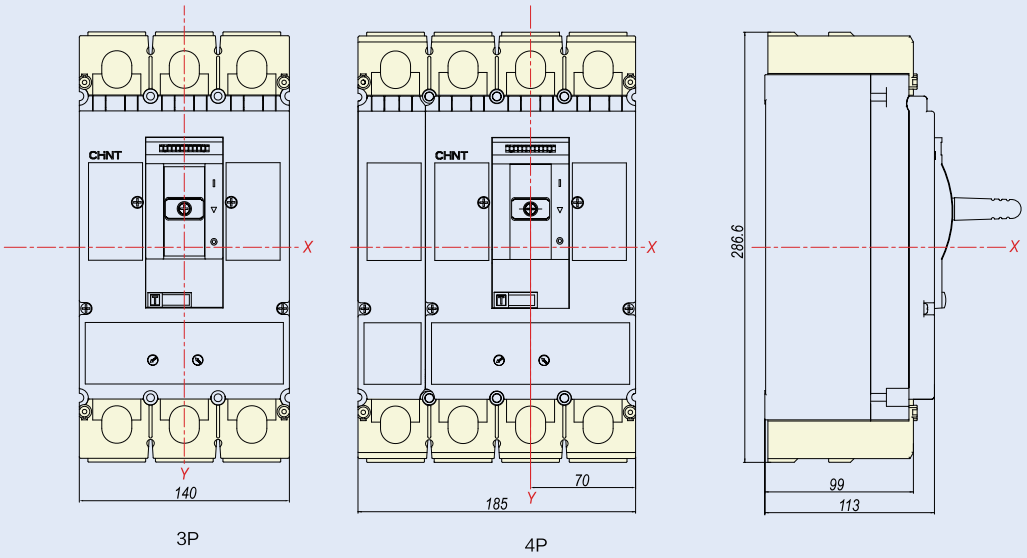

Unit (mm)

NM8N-400/630 Draw-out type

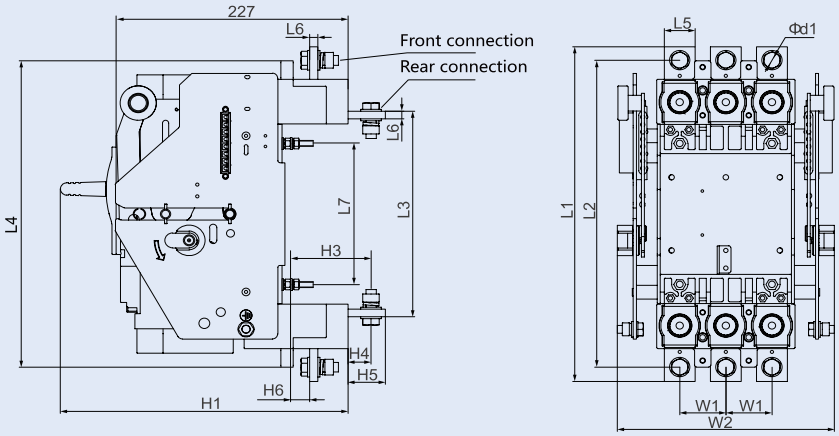

Unit (mm)

Current	Pole	Dimension														
		L1	L2	L3	L4	L5	L6	L7	H1	H3	H4	H5	H6	W1	W2	Φd1
In≤400A	3P	342	313	207	312	30	6	143	280	77	21	35.5	17.5	45	214	11
	4P	342	313	207	312	30	6	143	280	77	21	35.5	17.5	45	259	11
In>400A	3P	342.5	314.5	210.5	313.5	30	8	143	280	77.5	21.5	35.5	17.5	45	214	11
	4P	342.5	314.5	210.5	313.5	30	8	143	280	77.5	21.5	35.5	17.5	45	259	11

DIN-rail mounting

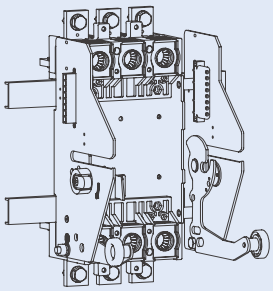

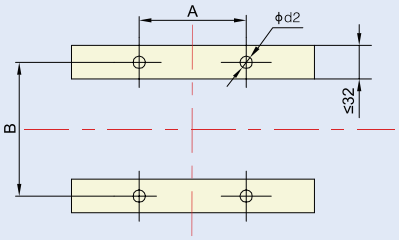

Pole	installation dimension		
	A	B	Φd2
3P	90	143	6.5
4P	135	143	6.5

DIN-rail mounting

Rear connection

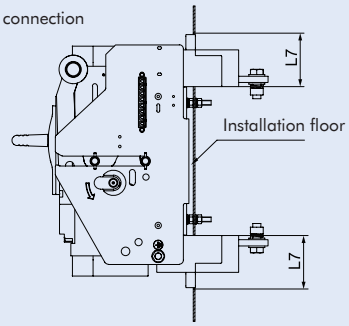

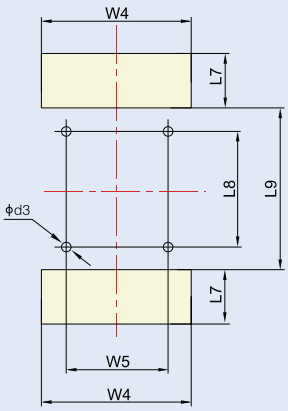

Front connection

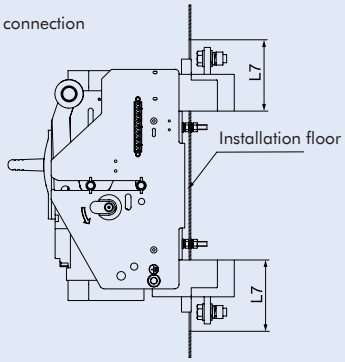

Current	Installation dimension of rear plate connection						
	L8	W5	L9	L7	W4	Φd3	Pole
In≤400A	143	90	181	70	138	7	3P
	143	135	181	70	182	7	4P
In>400A	144.5	90	182.5	70	138	7	3P
	144.5	135	182.5	70	182	7	4P

L7=90 when it is front connection, the rest of dimensions are the same with rear connection

8.4 NM8N-800

NM8N-800 Front connection (3P)

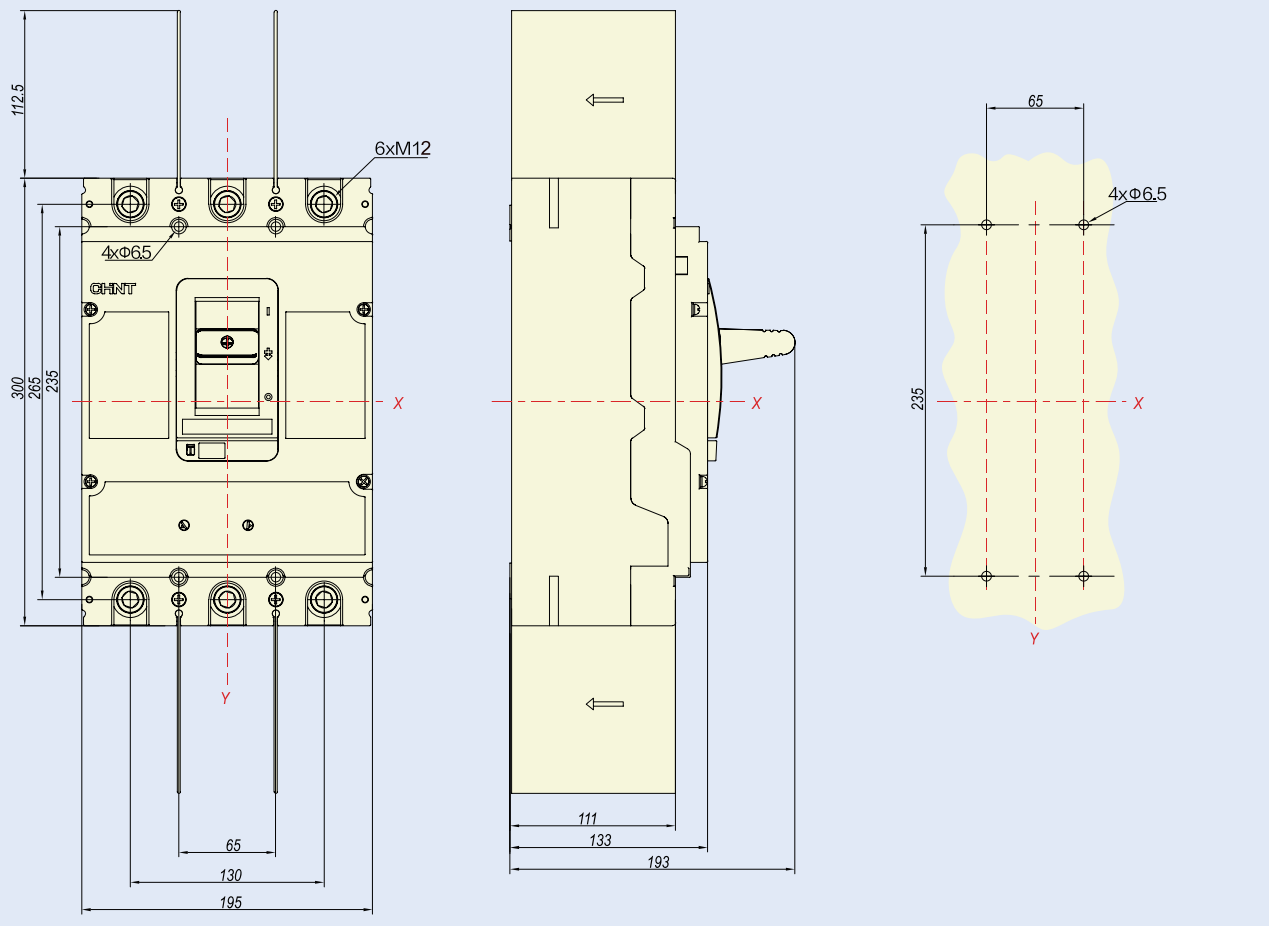

Unit (mm)

NM8N-800 Front connection (4P)

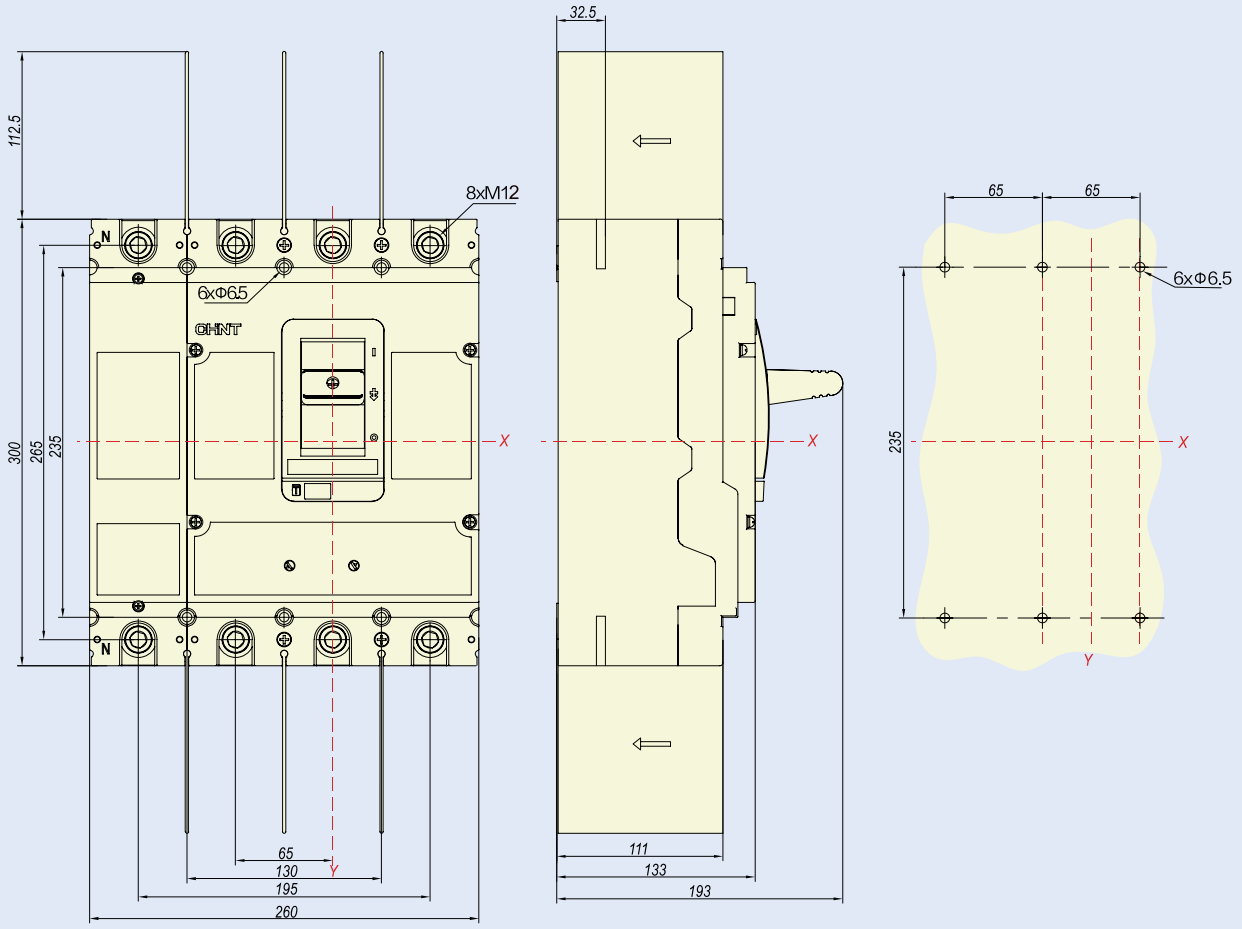

Unit (mm)

NM8N-800 Rear connection

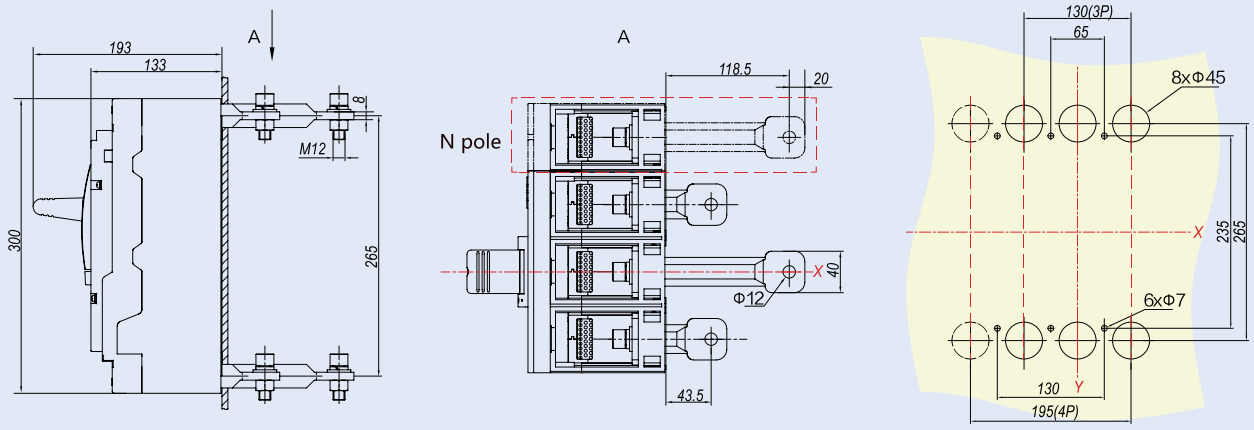

3P/4P

Unit (mm)

NM8N-800 Mechanical interlock

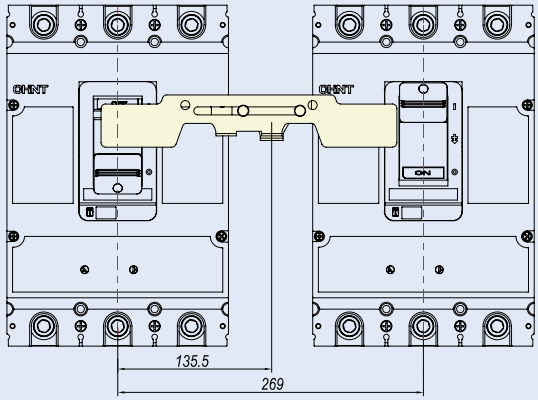

3P

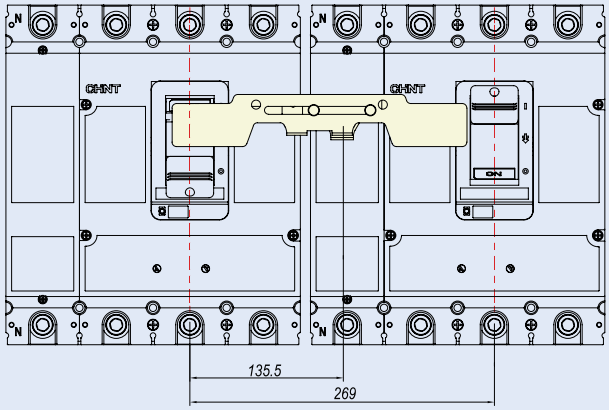

4P

Unit (mm)

NM8N-800 Short terminal cover

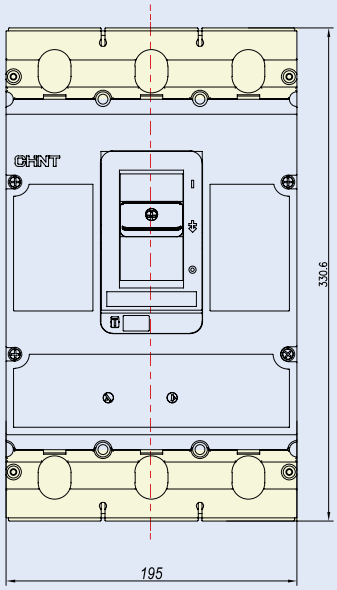

3P Short terminal cover

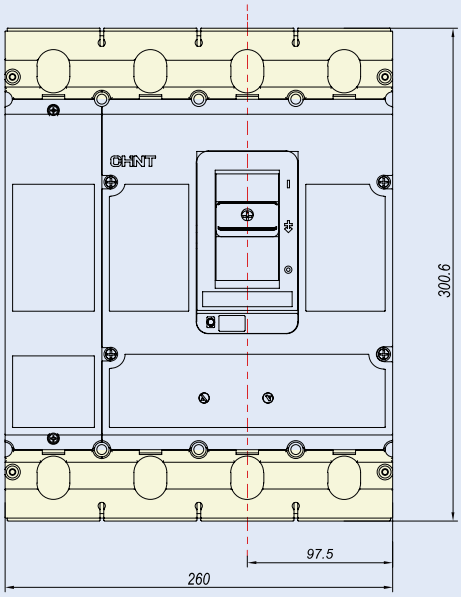

4P Short terminal cover

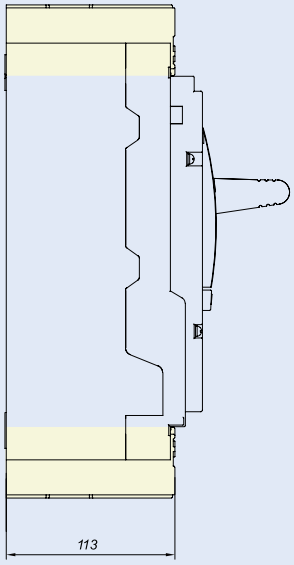

Unit (mm)

NM8N-800 Long terminal cover

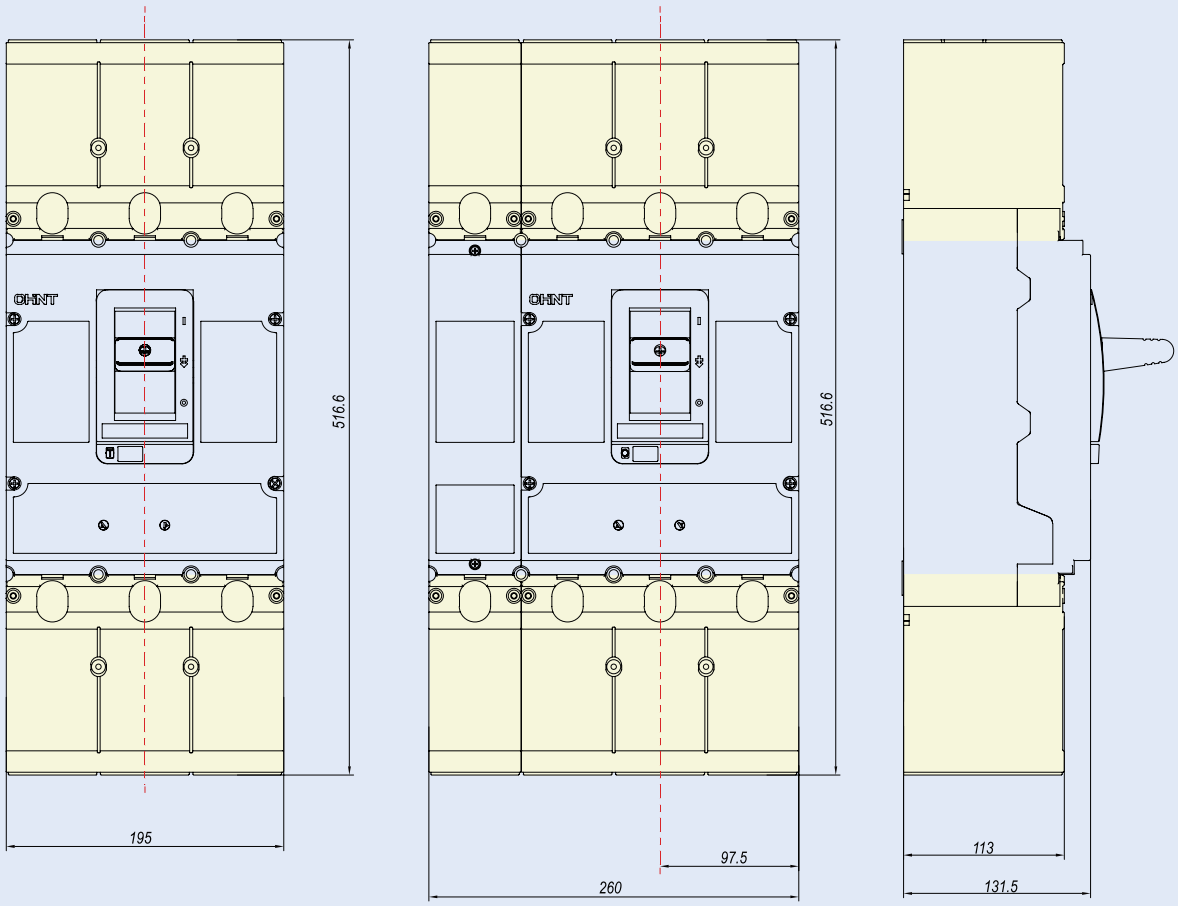

3P Long terminal cover

4P Long terminal cover

Unit (mm)

NM8N-800 Draw-out type

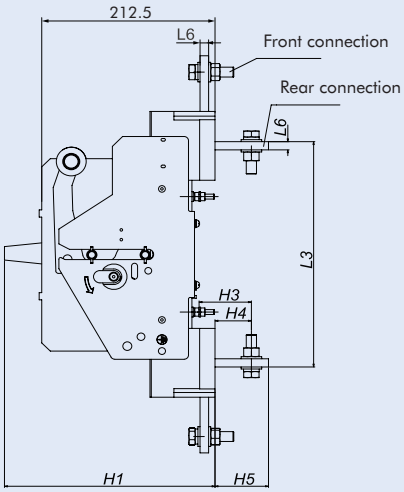

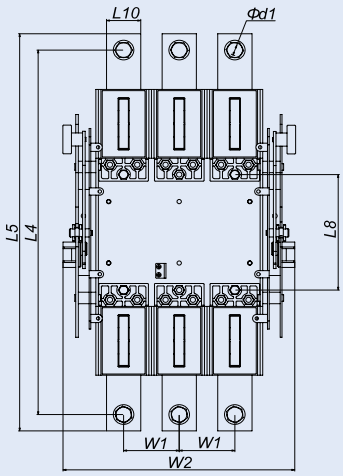

Unit (mm)

Pole	Dimension												
	L3	L4	L5	L6	L8	L10	H1	H3	H4	H5	W1	W2	Φd1
3P	275	445	485	10	141	40	270	61	42.5	62.5	65	281	13
4P	275	445	485	10	141	40	270	61	42.5	62.5	65	346	13

DIN-rail mounting

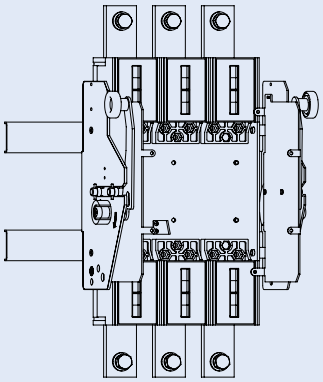

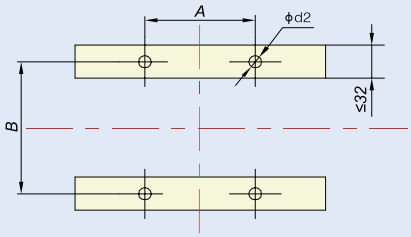

Pole	installation dimension		
	A	B	Φd2
3P	130	141	7
4P	195	141	7

Rear connection

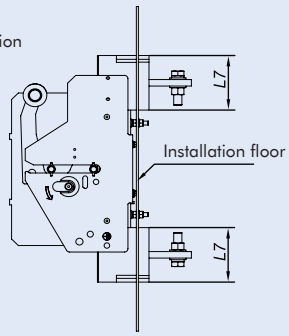

Front connection

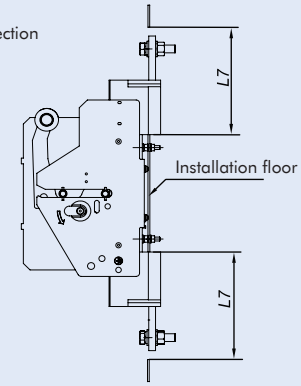

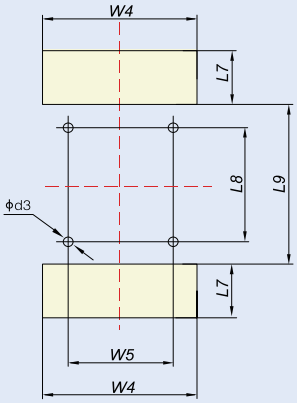

Pole	Installation dimension					
	L8	W5	L9	L7	W4	Φd3
3P	141	130	177	95	200	7
4P	141	195	177	95	265	7

L7=200 when it is front connection, the rest of dimensions are the same with rear connection

8.5 NM8N-1600

NM8N-1600 Front connection (Manual type 3P)

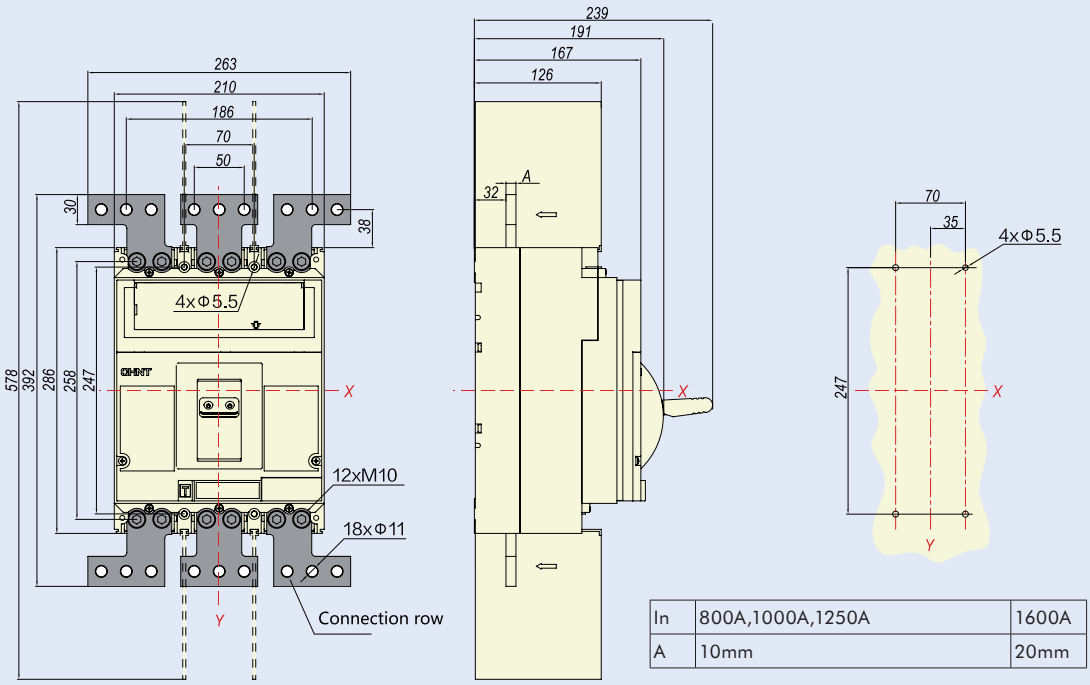

In	800A,1000A,1250A	1600A
A	10mm	20mm

Unit (mm)

NM8N-1600 Front connection (Manual type 4P)

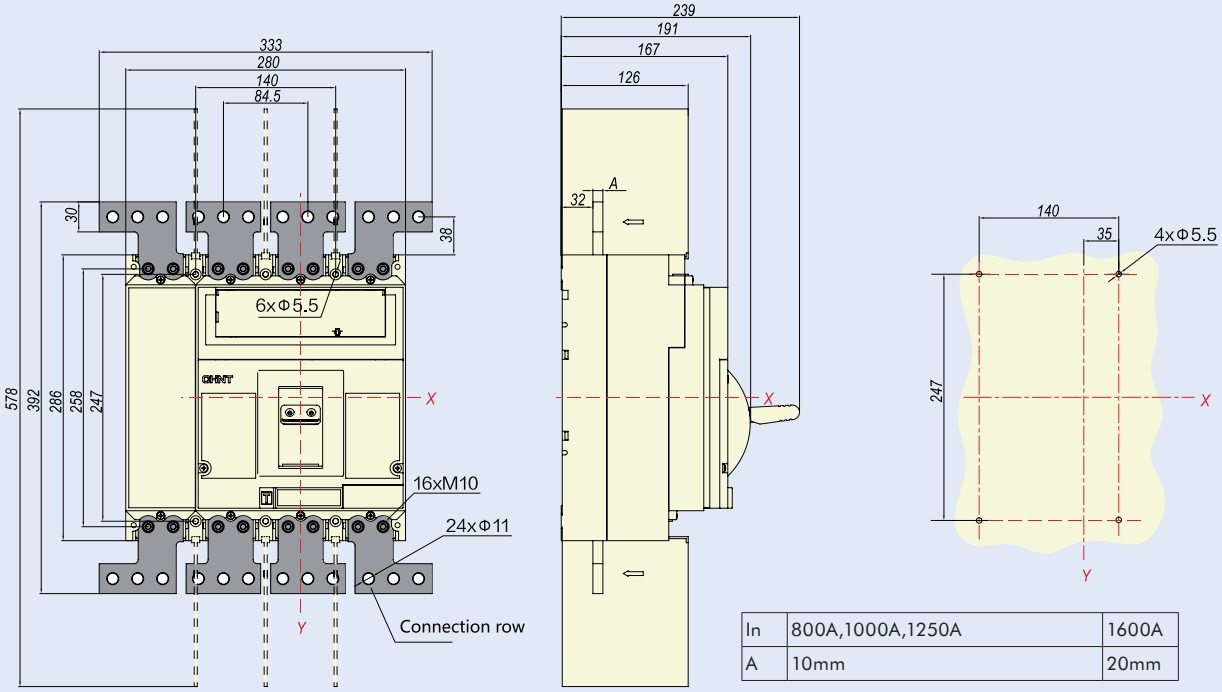

In	800A,1000A,1250A	1600A
A	10mm	20mm

Unit (mm)

NM8N-1600 Front connection (Motor type 3P)

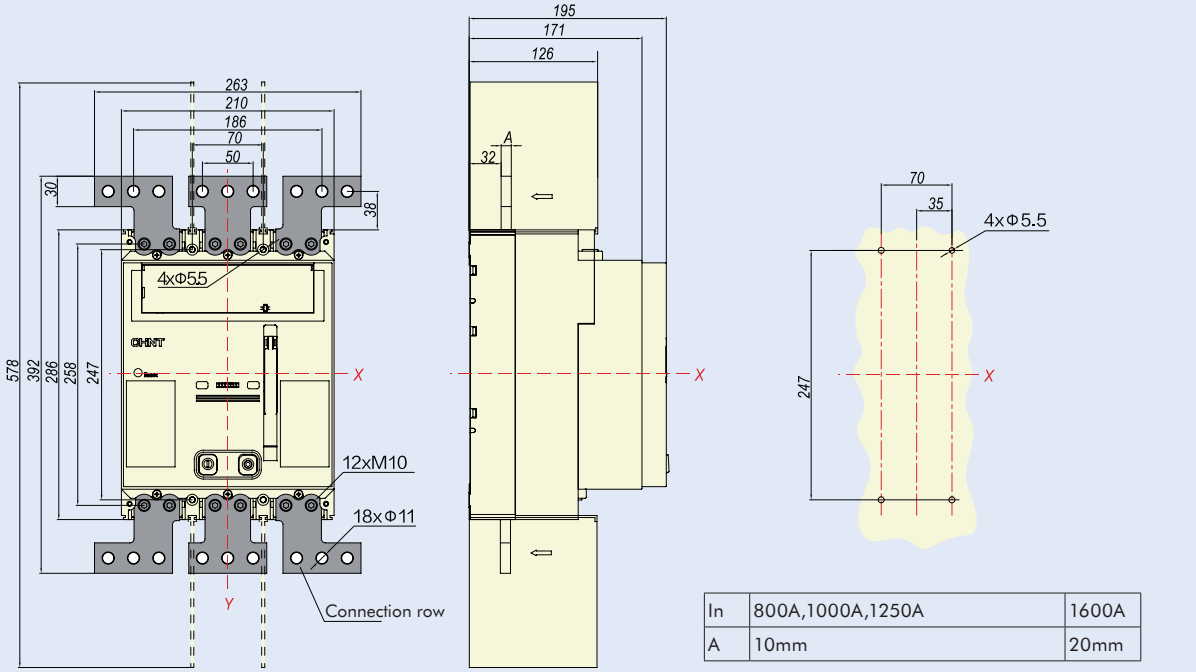

In	800A,1000A,1250A	1600A
A	10mm	20mm

Unit (mm)

NM8N-1600 Front connection (Motor type 4P)

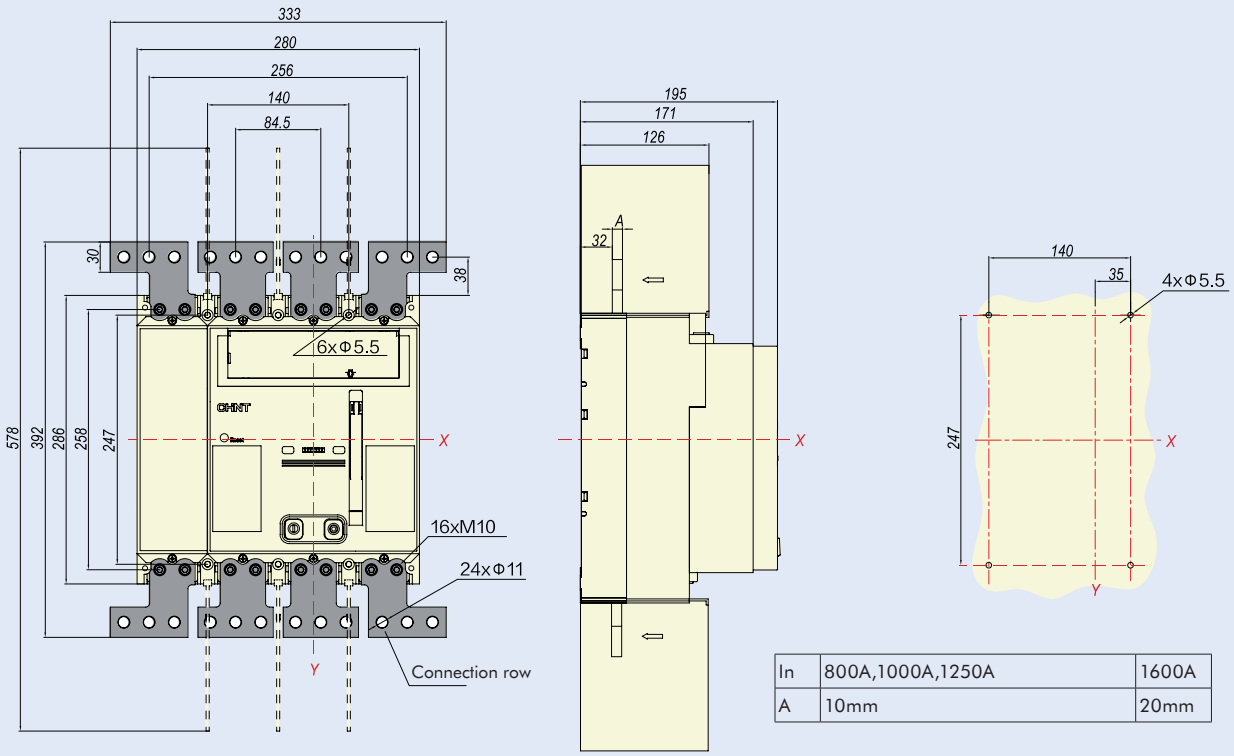

In	800A,1000A,1250A	1600A
A	10mm	20mm

Unit (mm)

8.6 NM8NL

NM8NL-125 Front connection

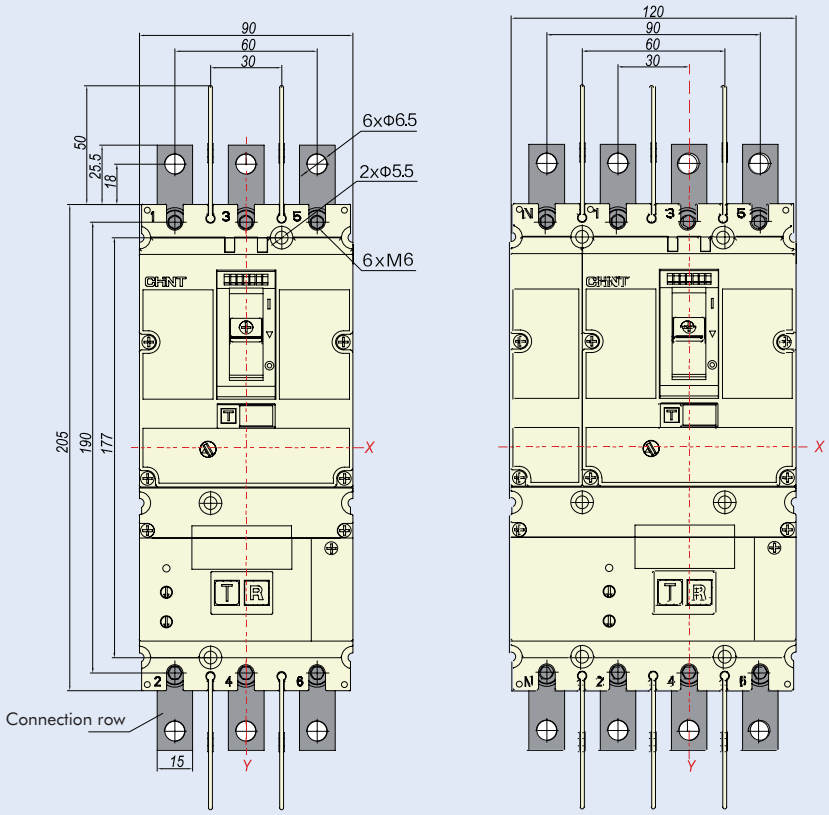

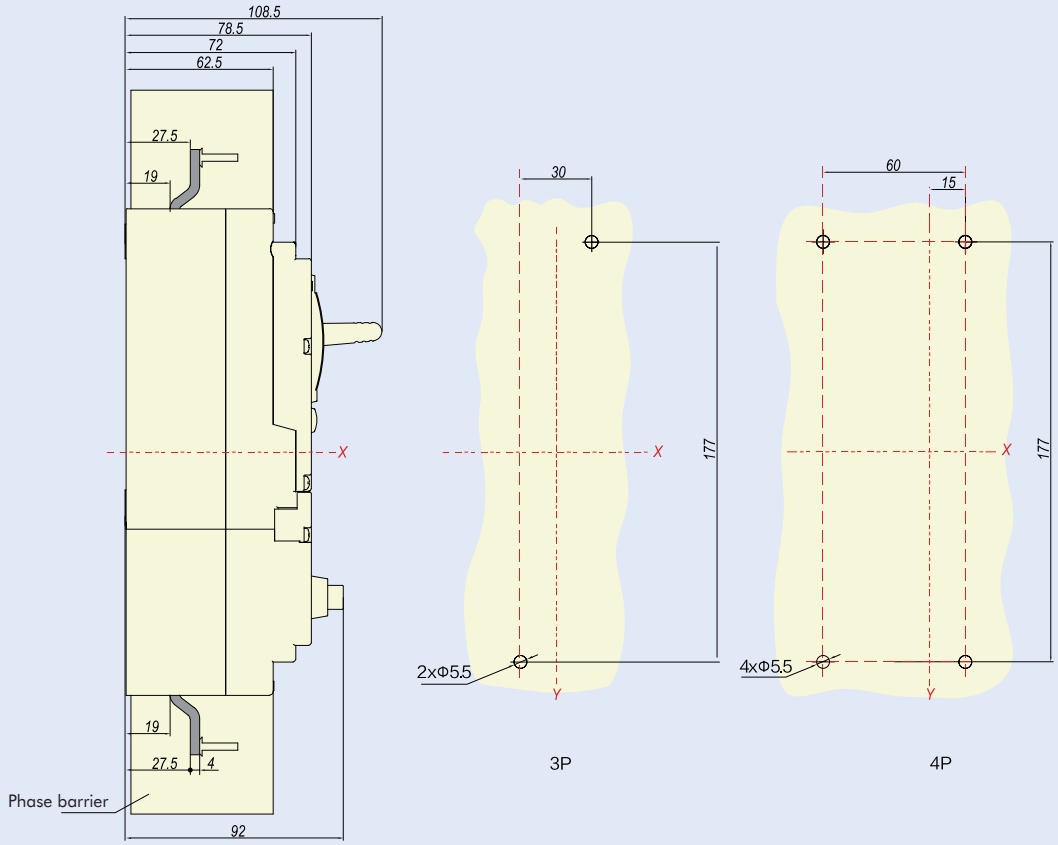

Unit (mm)

NM8NL-125 Rear connection

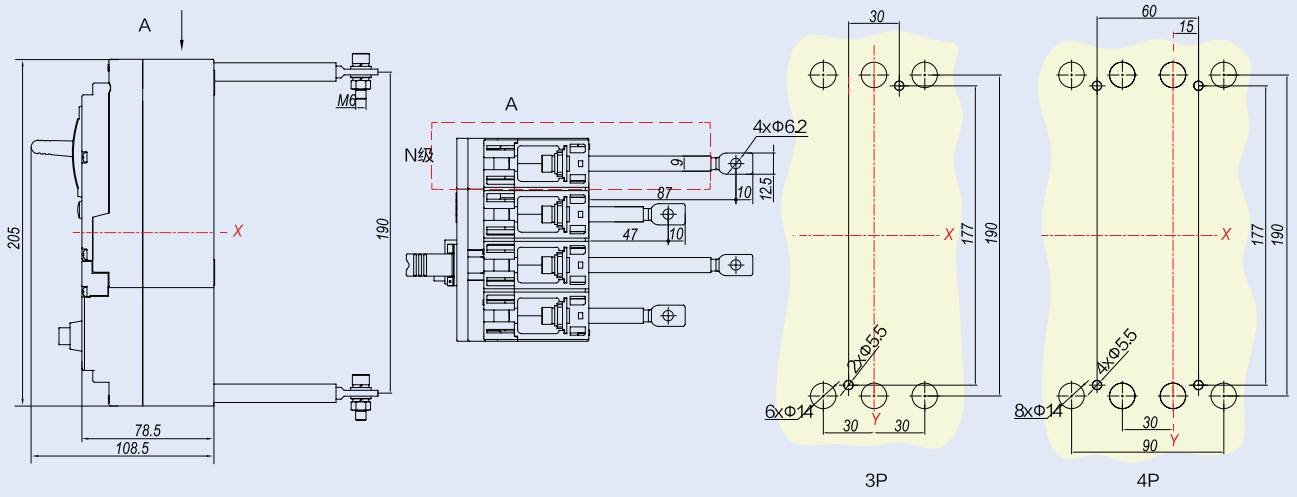

Unit (mm)

NM8NL-125 DIN-rail mounting

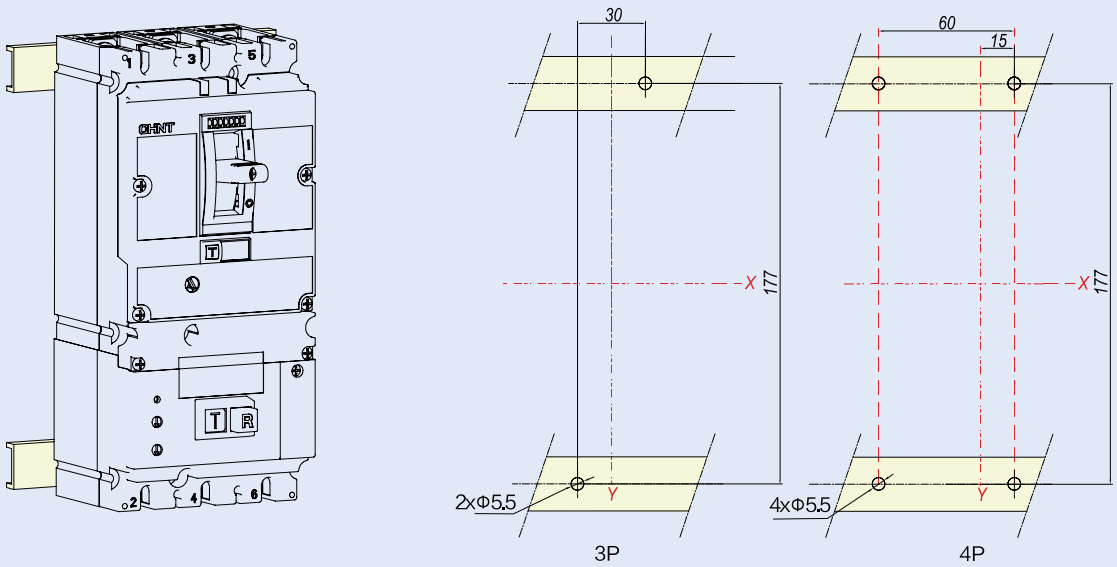

Unit (mm)

NM8NL-250 Front connection

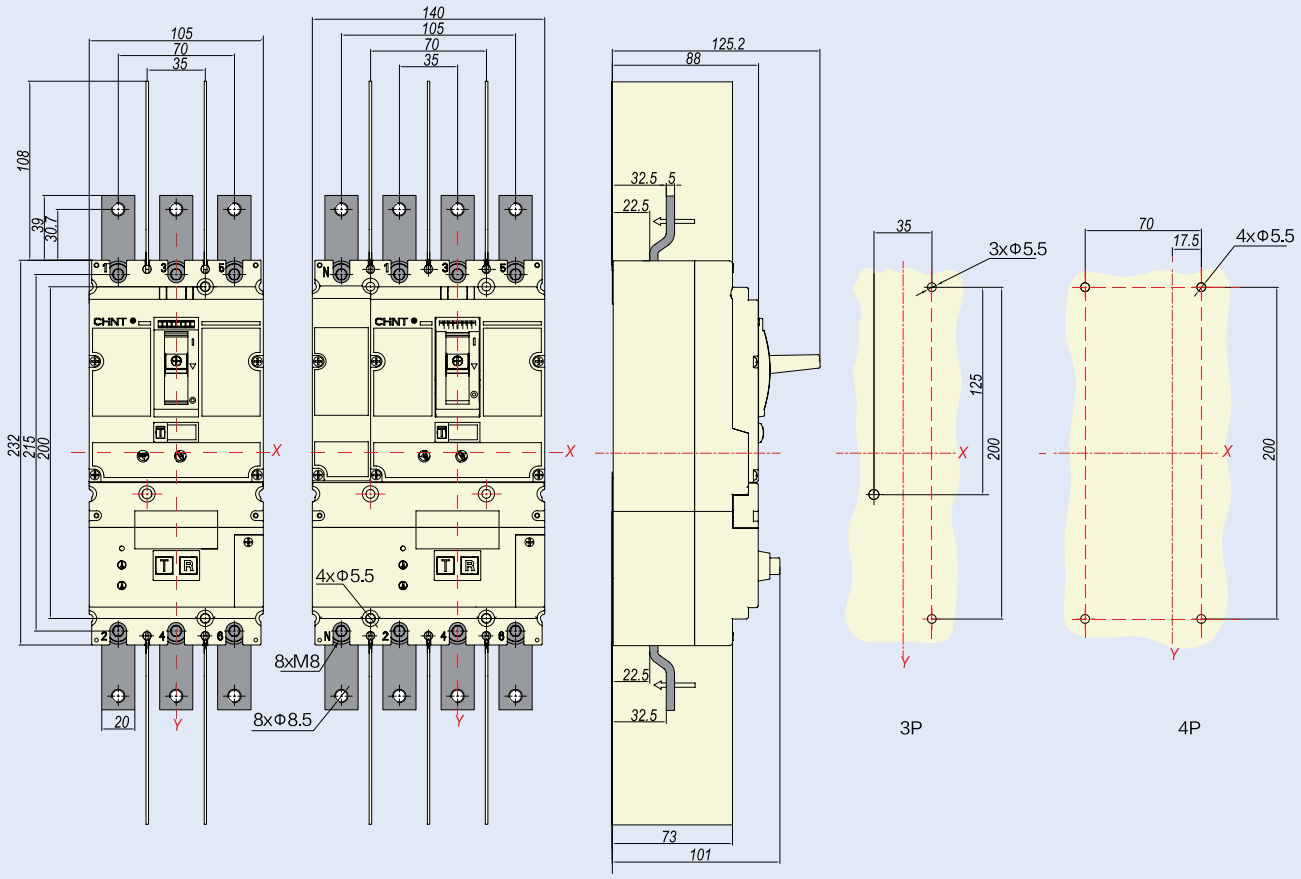

Unit (mm)

NM8NL-250 Rear connection

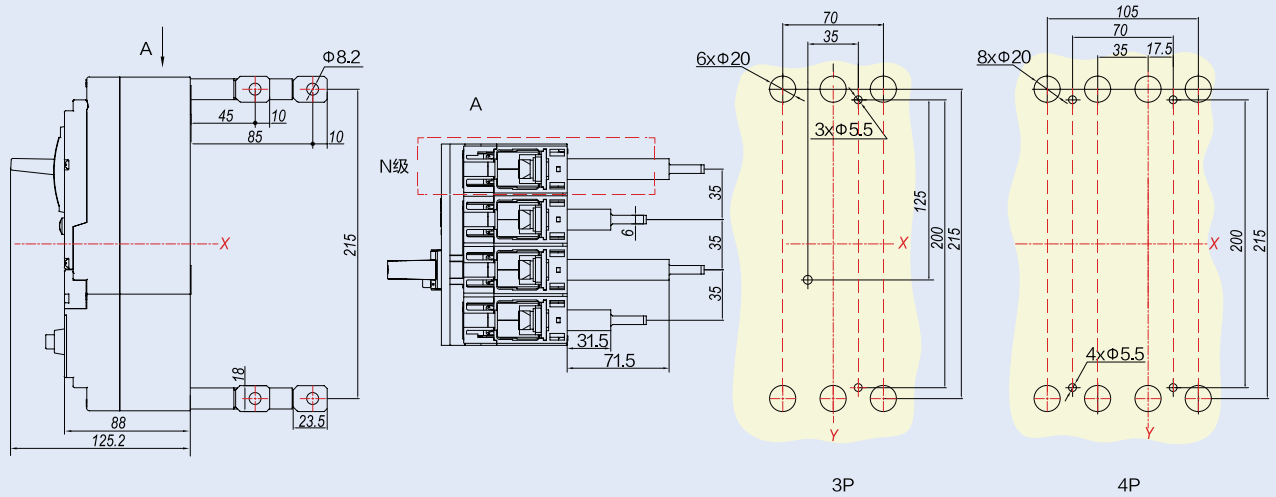

Unit (mm)

NM8NL-250 DIN-rail mounting

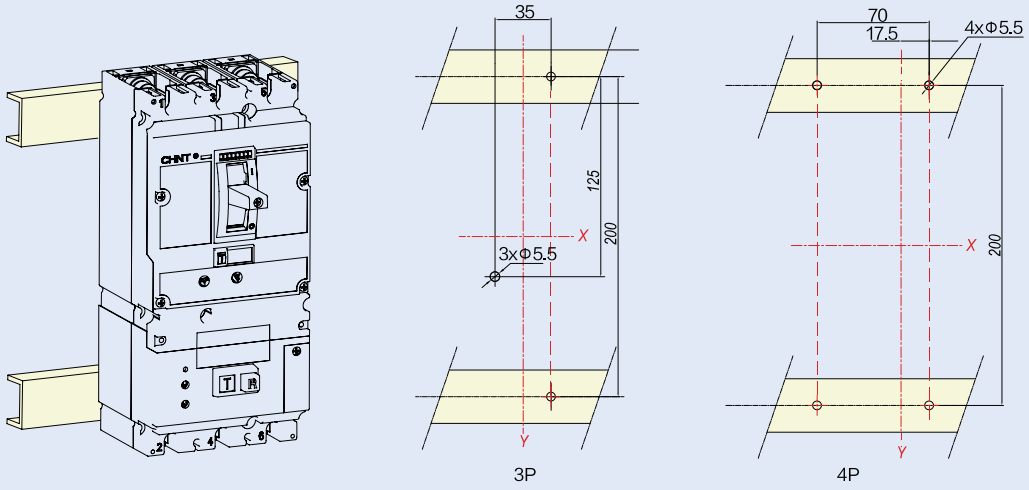

Unit (mm)

NM8NL-400/630 Front connection

Unit (mm)

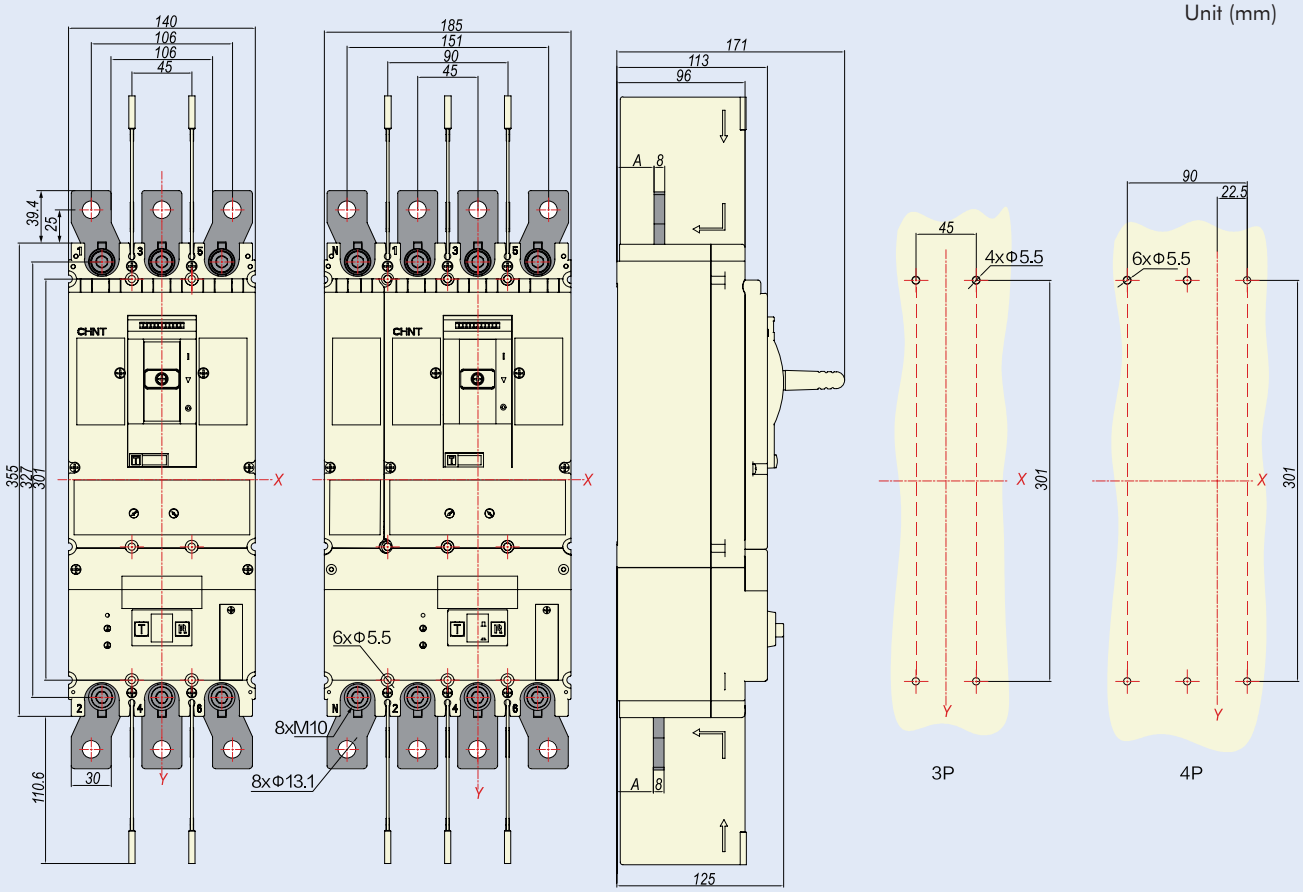

A	≤400A	500A,630A
mm	27	28

NM8NL-400/630 Rear connection

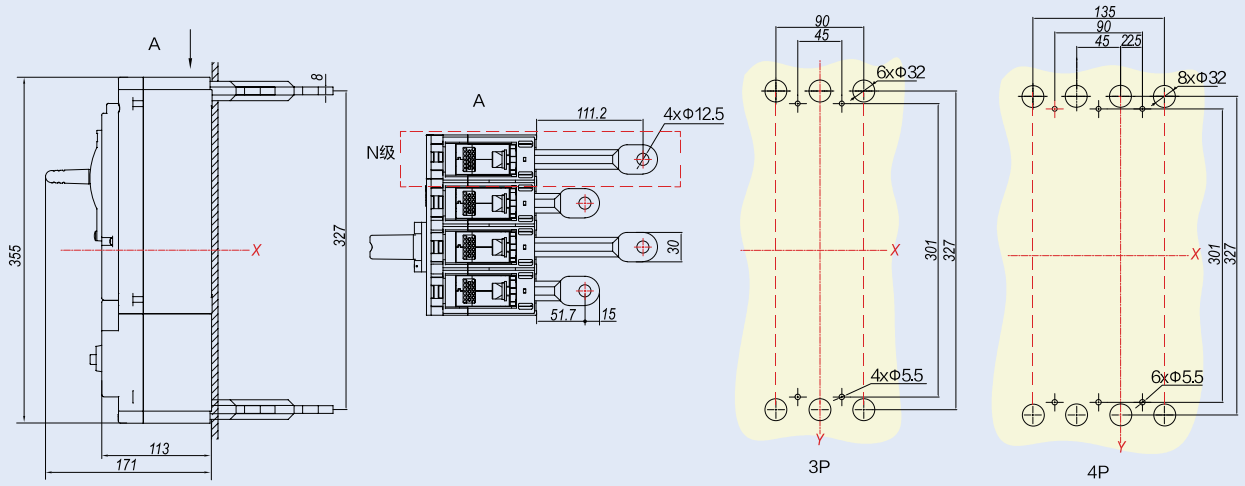

Unit (mm)

NM8NL-400/630 DIN-rail mounting

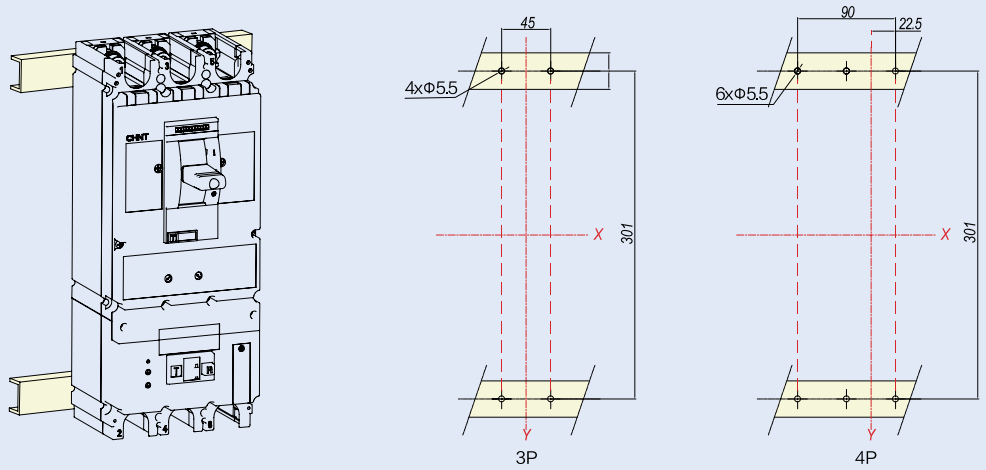

Unit (mm)

8.7 NM8N Wiring diagram

NM8N-125 Cable connector

Unit (mm)

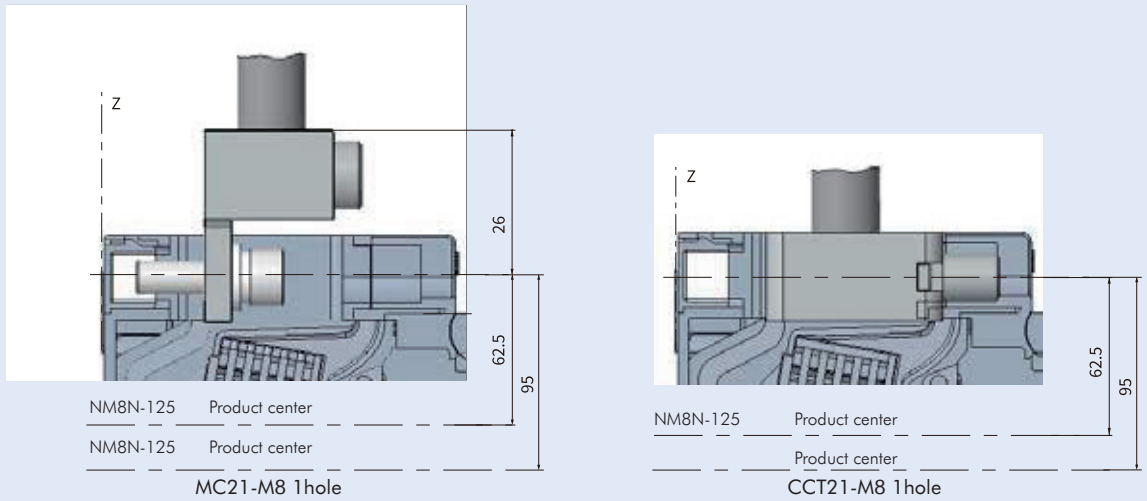

NM8N-250 Cable connector

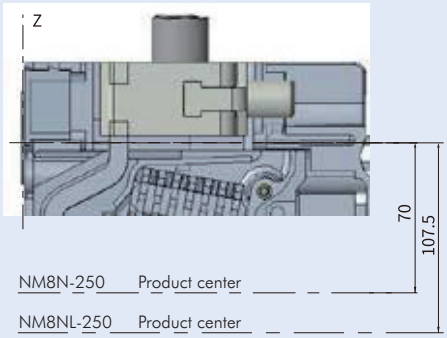

CCT22-M8 1hole

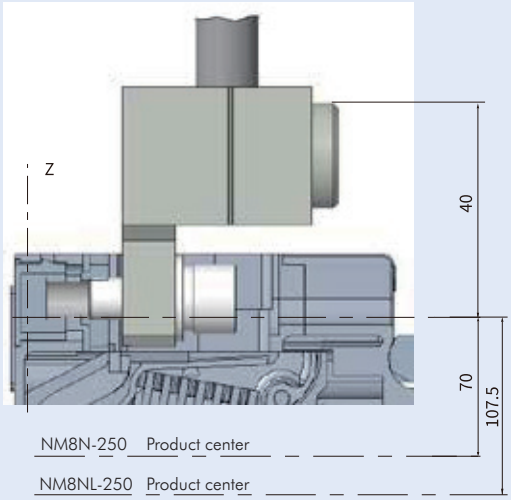

MC22-M8 1hole

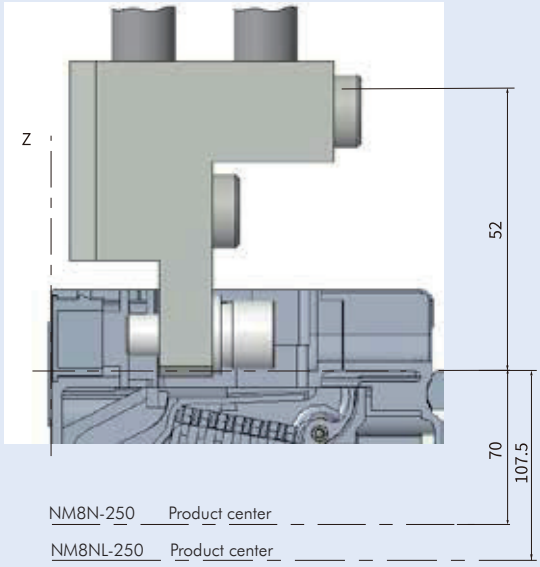

MC22-M8 2hole

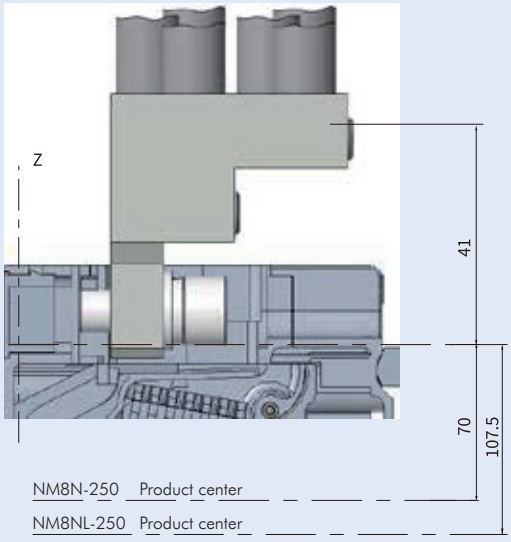

MC22-M8 6hole

Unit (mm)

NM8N-630 Cable connector

Unit (mm)

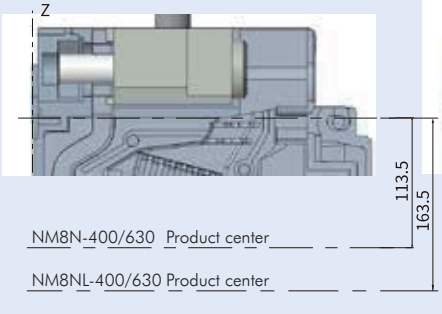

CCT23-M8 1hole

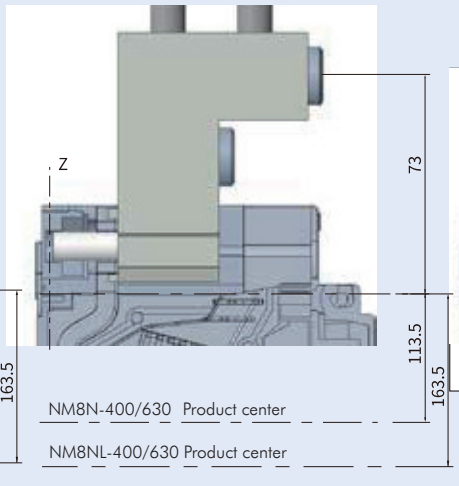

MC23-M8 2hole

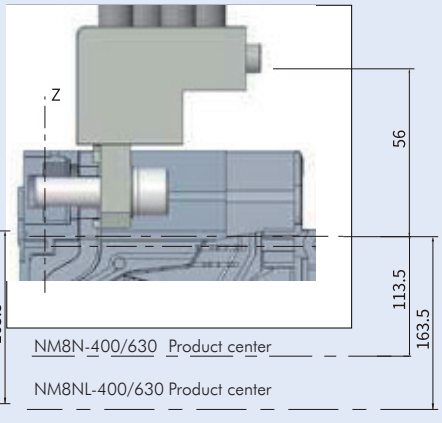

MC23-M8 2hole

NM8N-800 Cable connector

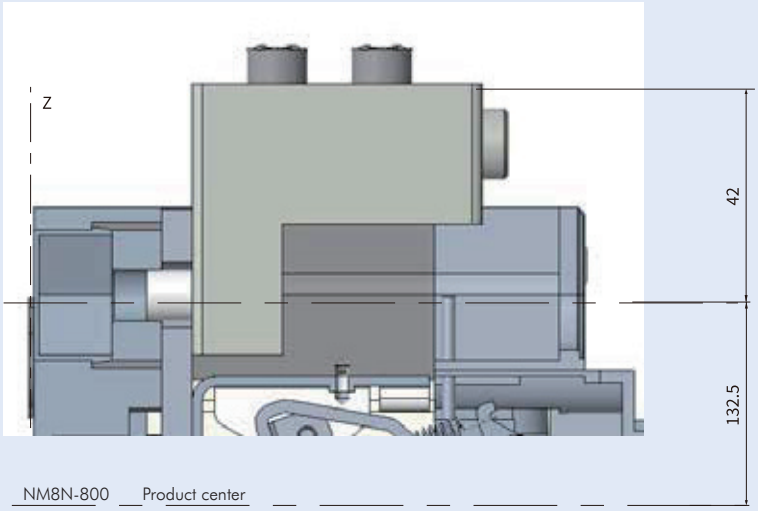

MC24-M8 2hole

Unit (mm)

NM8N-1600 Cable connector

Unit (mm)

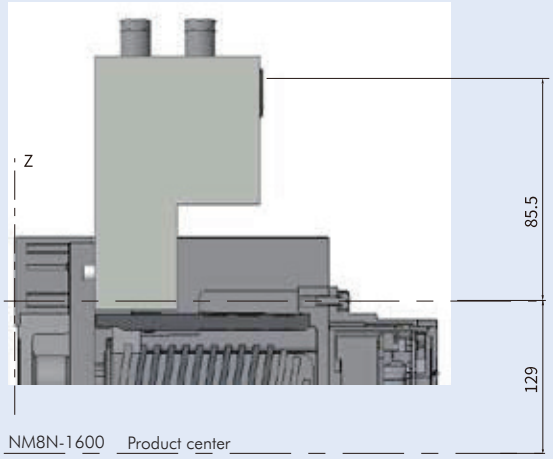

MC25-M8 4hole

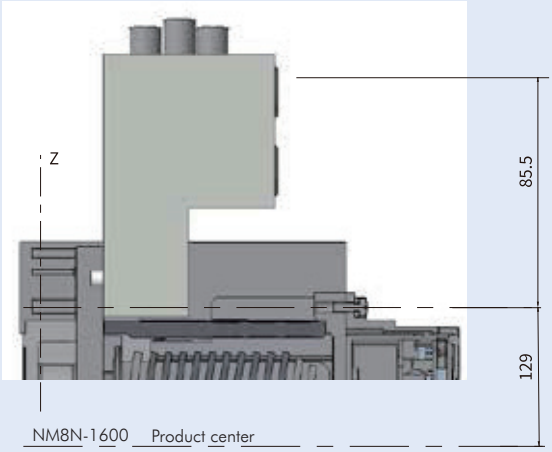

MC25-M8 3hole

8.8 Wiring

NM8N-125

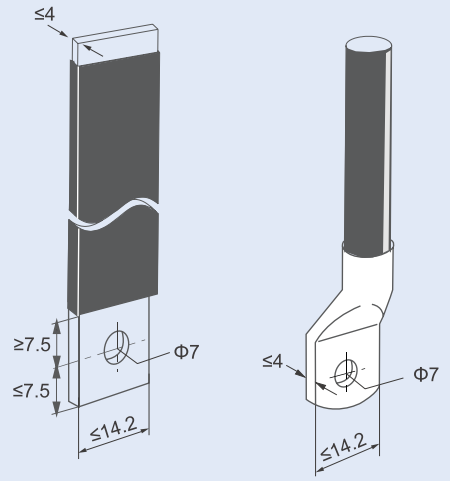

NM8N-250

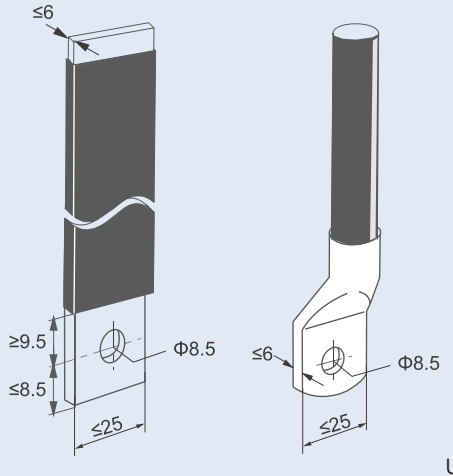

Unit (mm)

NM8N-400/630

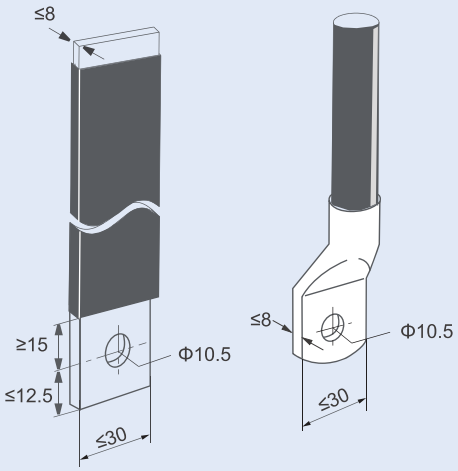

NM8N-800

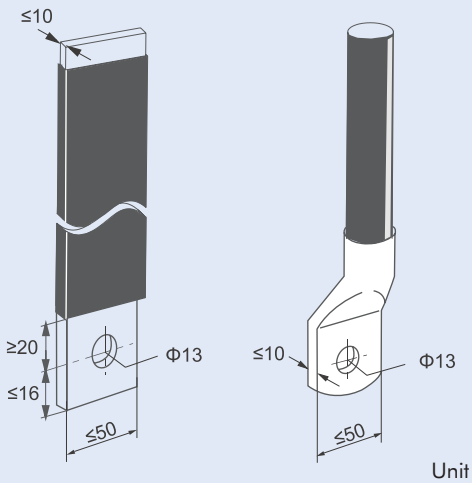

Unit (mm)

NM8N-1600

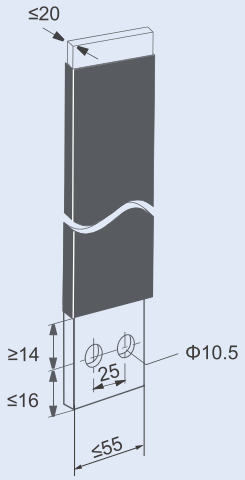

Unit (mm)

9. Accessories characteristics and installation

The NM8N moulded case circuit breaker offers various accessory modules. For more details, please refer to page P84.

9.1 AX Auxiliary contact

9.1.1 Function

A volt-free contact to provide remote indication of the circuit breaker's ON or OFF status.

9.1.2 Model description

AX 21- M8

- M8 — Serial code:NM8N series
- 21 — Frame size code:Auxiliary contacts are universal accessories for each frame,with default as code 21
- AX — Auxiliary contact name code

9.1.3 Indication of circuit breaker status

Circuit breaker is at breaking status	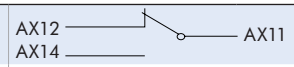
Circuit breaker is at making status	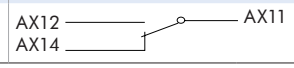

9.1.4 Electrical characteristics

Rated voltage (V)	Rated current (A)	
	AC-15	DC-13
AC 110	5	—
AC 240	4	—
AC 415	2	—
DC 110	—	0.25
DC 220	—	0.25

9.1.5 Wiring diagram

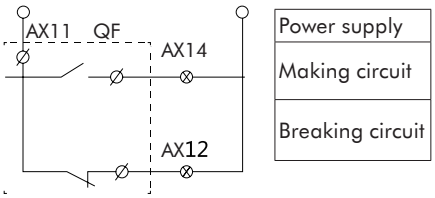

9.2 AL Alarm contact

9.2.1 Function

It is mainly used to provide a signal when the load of the circuit breaker is overloaded, short-circuited or undervoltage, or tripped.

A volt-free contact to provide remote indication that the circuit breaker has tripped due to:

- Overload or short-circuit
- Undervoltage
- Residual current
- Non-manual trips.

9.2.2 Model description

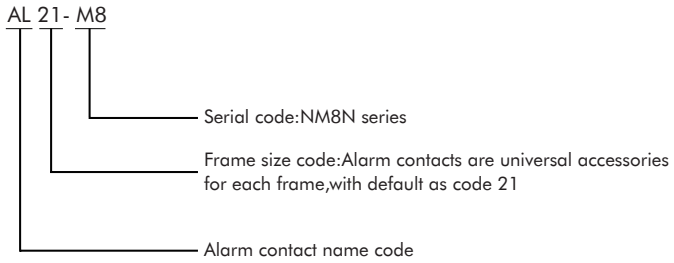

9.2.3 Indication of circuit breaker status

Circuit breaker is Normal	AL12 AL14 — AL11
Circuit breaker has tripped	AL12 AL14 — AL11

9.2.4 Electrical characteristics

Rated voltage (V)	Rated current (A)	
	AC-15	DC-13
AC 110	5	—
AC 240	4	—
AC 415	2	—
DC 110	—	0.25
DC 220	—	0.25

9.2.5 Wiring diagram

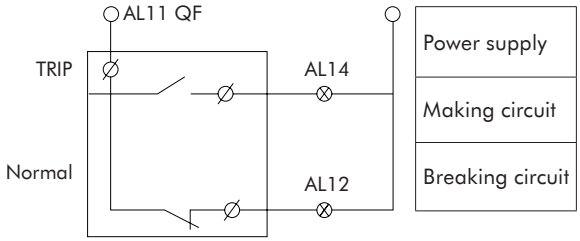

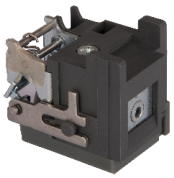

9.3 SHT Shunt release

9.3.1 Function

Shunt releases operate based on electrical signals, enabling remote control of circuit breakers. When a voltage between 70% and 110% of the rated control power supply voltage is applied to its terminals, the shunt release triggers the circuit breaker to open.

9.3.2 Model description

SHT 21- M8 AC48V

- AC48V: Rated voltage: AC48V/110V/220-240V/380-415V; DC24V/110-120V/220V
- M8: Series code:NM8N series
- 21: Frame code: 21 for 125 frame; 22 for 250/400/630 frame; 24 for 800 frame; 25 for 1600 frame
- SHT: Shunt release code

9.3.3 Electrical characteristics

Frame size	Power consumption (W)					
	AC48V	AC110V	AC220-240V	AC380-415V	DC24V	DC220V
125A	2.2	2.2	2	2.5	2.5	2
250/400/630A	2.3	2.5	2.2	2.5	2.2	2.5
800A	2.3	2.5	2.2	2.5	2.2	2.5
1600A	110	195	480	560	230	160

9.3.3 Action characteristics

The shunt release can be powered for extended periods. Response time: pulse type≥20ms,≤60ms

9.3.5 Wiring diagram

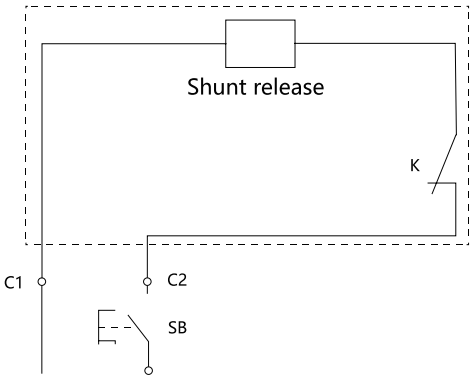

Note: When using a rated control power supply voltage of DC24V for the shunt release, the maximum length of the copper wire (each of the two wires) must meet the requirements outlined in the following table:

Conductor cross-sectional area / Rated control supply voltageUs(DC24V)	1.5mm^2	2.5mm^2
100%U_s	150m	250m
85%U_s	100m	160m

9.4 UVT Under-voltage release

9.4.1 Function

Undervoltage releases operate based on electrical signals, enabling remote control of circuit breakers to protect electrical equipment. When the power supply voltage at it terminals is too low, the undervoltage release triggers the circuit breaker to open.

- Undervoltage Trip (70% - 35% of rated control supply voltage):

If the supply voltage drops to between 70% and 35% of the rated control supply voltage, the undervoltage release triggers the circuit breaker to open.

- Guaranteed Closure (≥ 85% of rated control supply voltage):

Once the supply voltage returns to a level that equals or exceeds 85% of the rated control supply voltage of the undervoltage release, the circuit breaker should be allowed to close.

- Prevention (Less than 35% of rated control supply voltage):

If the supply voltage drops below 35% of the rated control supply voltage of the undervoltage release, it should prevent the circuit breaker from closing.

UVT 21- M8 AC48V

- AC48V: Rated voltage: AC48V;AC110V;AC220-240V;AC380-415V; DC24V;DC48V;DC110-120V;DC220V
- M8: Series code:NM8N series
- 21: Frame size code: 21 for 125 frame; 22 for 250/400/630 frame; 24 for 800 frame; 25 for 1600 frame
- UVT: Under-voltage release code

9.4.3 Electrical characteristics

Frame size	Power consumption (W)							
	AC48V	AC110V	AC220-240V	AC380-415V	DC24V	DC48V	DC110-120V	DC220V
125A	1.6	1.6	2	3	1.2	1.6	2	2.2
250/400/630A	1.5	1.5	2.2	3	0.8	1.5	2	2.5
800A	1.5	1.5	2.2	3	0.8	1.5	2	2.5
1600A	2.6	2.2	1.7	0.7	2.8	2.5	2.2	1.8

9.4.4 Wiring diagram

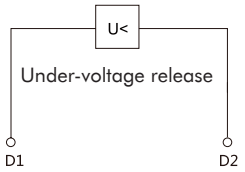

9.5 MOD Motor-driven mechanism

9.5.1 Function

This system is suitable for remotely closing, opening, and re-closing circuit breakers, making it ideal for both long-distance operations and automation applications.

A: Protection level: IP40

- Reliable insulation;
- With isolation function indication;
- O (open), I (closed) and free trip 3 position indications;
- Circuit breaker free trip
- Manually or automatically operated circuit breakers for closing and opening.

B: manul operation

Pull the "manul/auto" switch to the manual position and turn the operation handle to switch on and off the circuit breaker.

C: automatic operation

Pull the "manul/auto" switch to the automatic position, and remotely press the "close or open" button to switch on and off the circuit breaker.

D: Automatically switch on or off by pulse or self-holding signal control.

E: Only when the control voltage is ≥ 85% Un and ≤ 110% Un can the circuit breaker be reliably switched on and off.

9.5.2 Model description

MOD 21- M8 AC110/DC110-120V

- AC110/DC110-120V: Rated voltage: AC110/DC110-120V;AC220-240V/DC220V; AC380-415V;DC24V
- M8: Series code:NM8N series
- 21: Frame size code: 21 for 125 frame; 22 for 250 frame; 23 for 400/630 frame; 24 for 800 frame; 25 for 1600 frame
- MOD: Motor-driven mechanism code

Note: The 1600A frame motor-driven mechanism is assembled in the factory and is suitable for electronic circuit breakers and disconnectors based on the internal structure/configuration of the circuit breaker.

9.5.3 Electrical characteristics

Frame size	Operational Type	Rated operational voltage	Life (CO recycle)	Power consumption	Action current	Making duration	Breaking duration	Minimum duration of ON(OFF) signal pulse
125A	MOD 21-M8	AC110V/DC110 AC220-240V DC220V AC380-415V DC24V	10000	150 150 150 100	≥3 ≥4	≤500ms	≤500ms	300ms
250A	MOD 22-M8	AC110V/DC110 AC220-240V DC220V AC380-415V DC24V	10000	150 150 150 100	≥3 ≥4	≤500ms	≤500ms	300ms
400/630A	MOD 23-M8	AC110V/DC110 AC220-240V DC220V AC380-415V DC24V	8000	300 300 300 190	≥3 ≥8	≤1000ms	≤1000ms	300ms
800A	MOD 24-M8	AC110V/DC110 AC220-240V DC220V AC380-415V DC24V	4000	300 300 300 190	≥3 ≥8	≤1000ms	≤1000ms	300ms

9.5.4 Wiring diagram

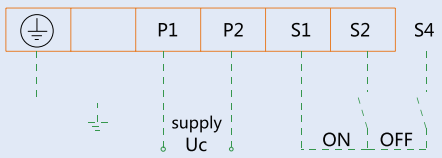

9.5.5 Installation dimension drawing

Overall and mounting dimension of MOD21-M8

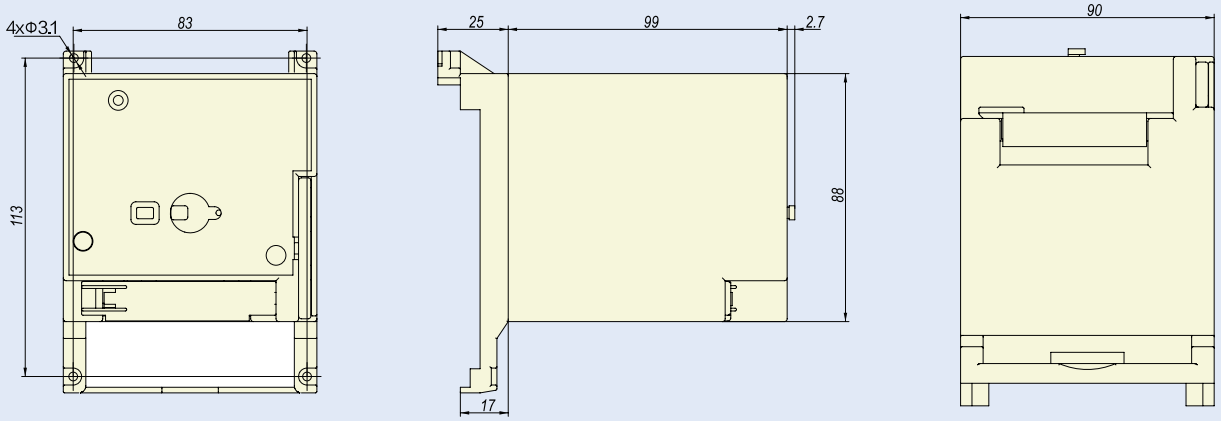

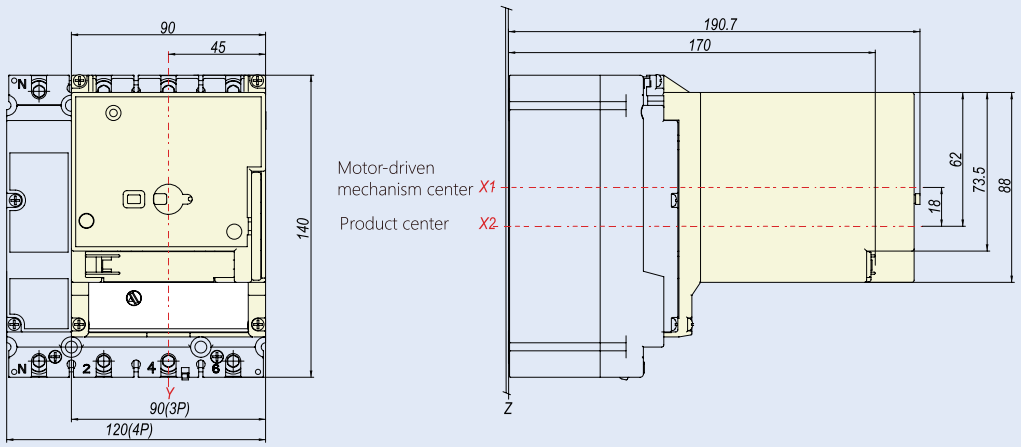

Overall dimension of MOD22-M8

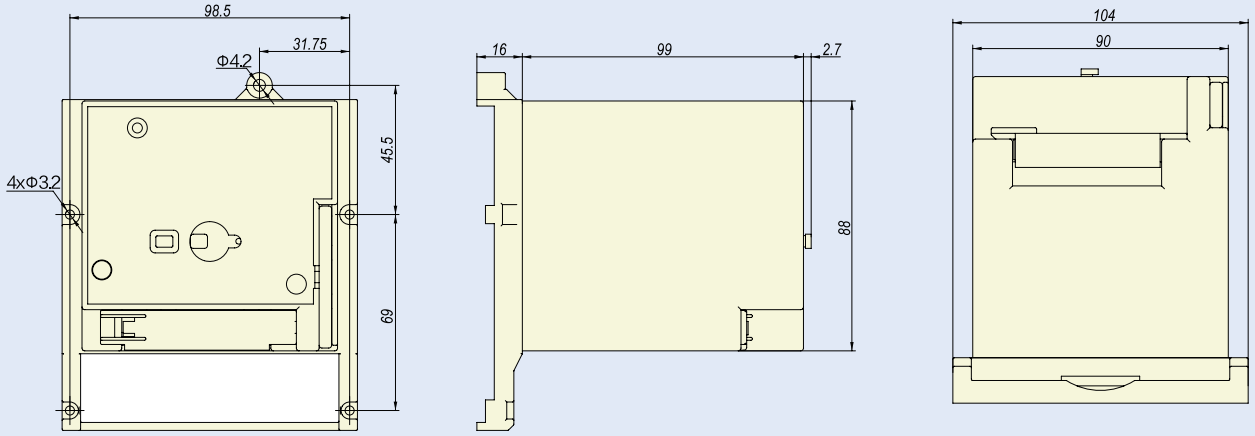

Mounting dimension of MOD22-M8

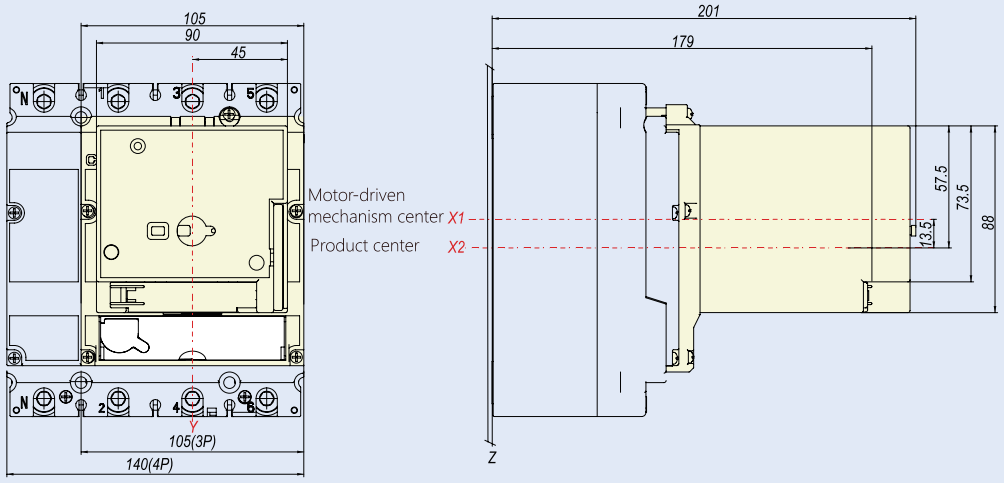

Overall and mounting dimension of MOD23-M8

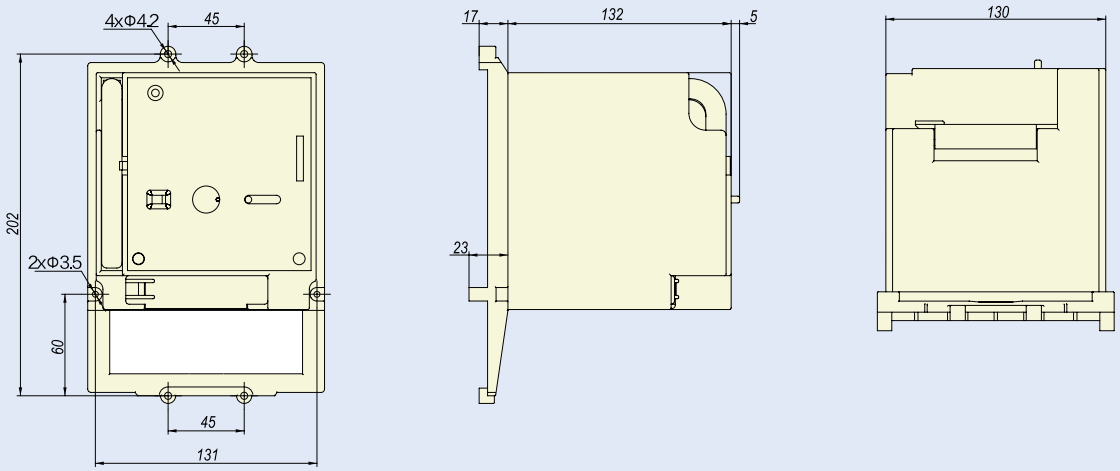

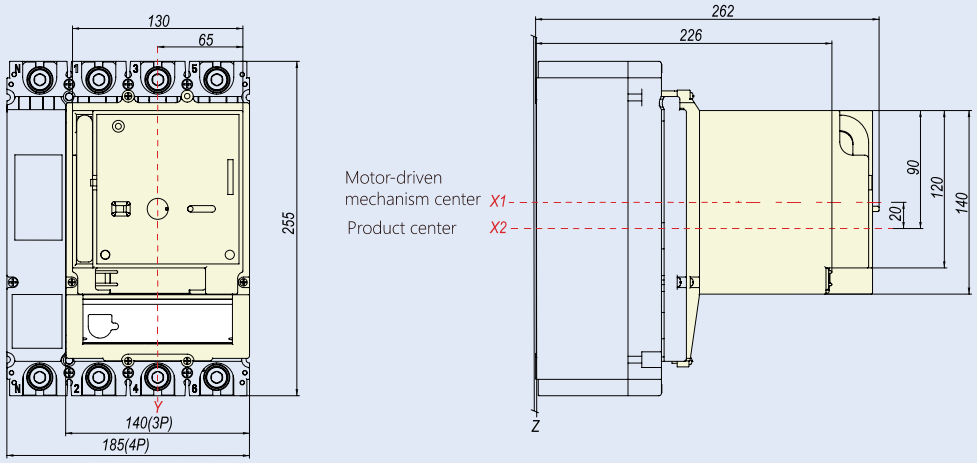

Overall and mounting dimension of MOD24-M8

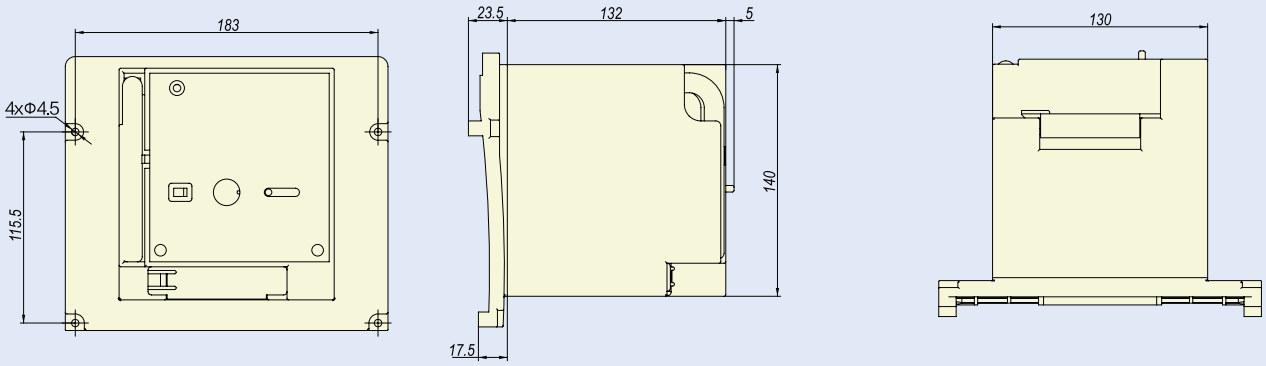

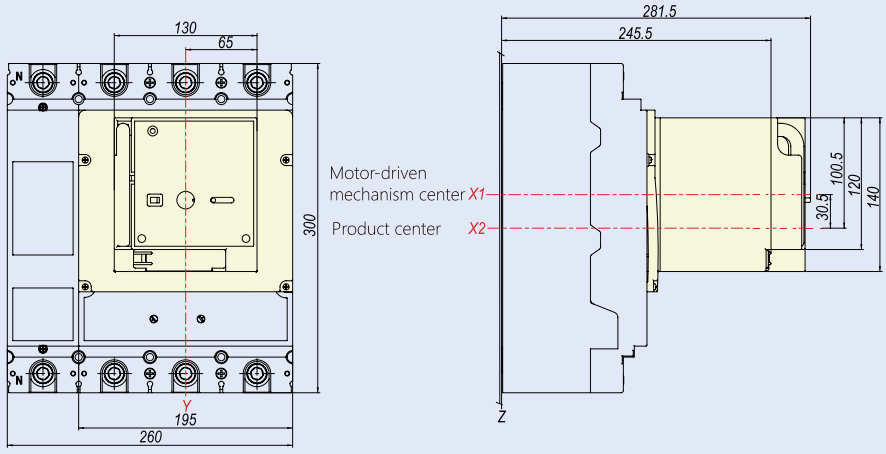

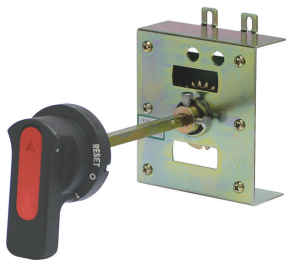

9.6 SRH Economic extended rotary handle

9.6.1 Function

A unique design and transmission structure enable the circuit breaker to close, open, and reclose by rotating the handle.

Protection degree: IP30

- With isolation funtion indication;
- O (open), I (closed) and free trip 3 position indications;
- The circuit breaker can be locked in the OFF position using 1 to 3 padlocks with a diameter of 5 to 8mm. This prevents the circuit breaker from closing and ensures the switch cabinet cannot be opened.
- The rotary handle features an integrated door-interlock function that prevents the cabinet door from opening when the switch is in the ON position. In emergency situations, the cabinet door can be opened using the emergency unlocking device located on the handle.

9.6.2 Model description

SRH 21- M8 3P

- 3P: Number of poles: 3P; 4P (only applicable to 125, 250 frames);400A and above frames have no code
- M8: Series code:NM8N series
- 21: Frame size code: 21 for 125 frame; 22 for 250 frame; 23 for 400/630 frame; 24 for 800 frame; 25 for 1600 frame
- SRH: Economic extended rotary handle code

Note: default length of shaft is 150mm

9.6.3 Installation dimension drawing

Overall and mounting dimension of SRH21-M8

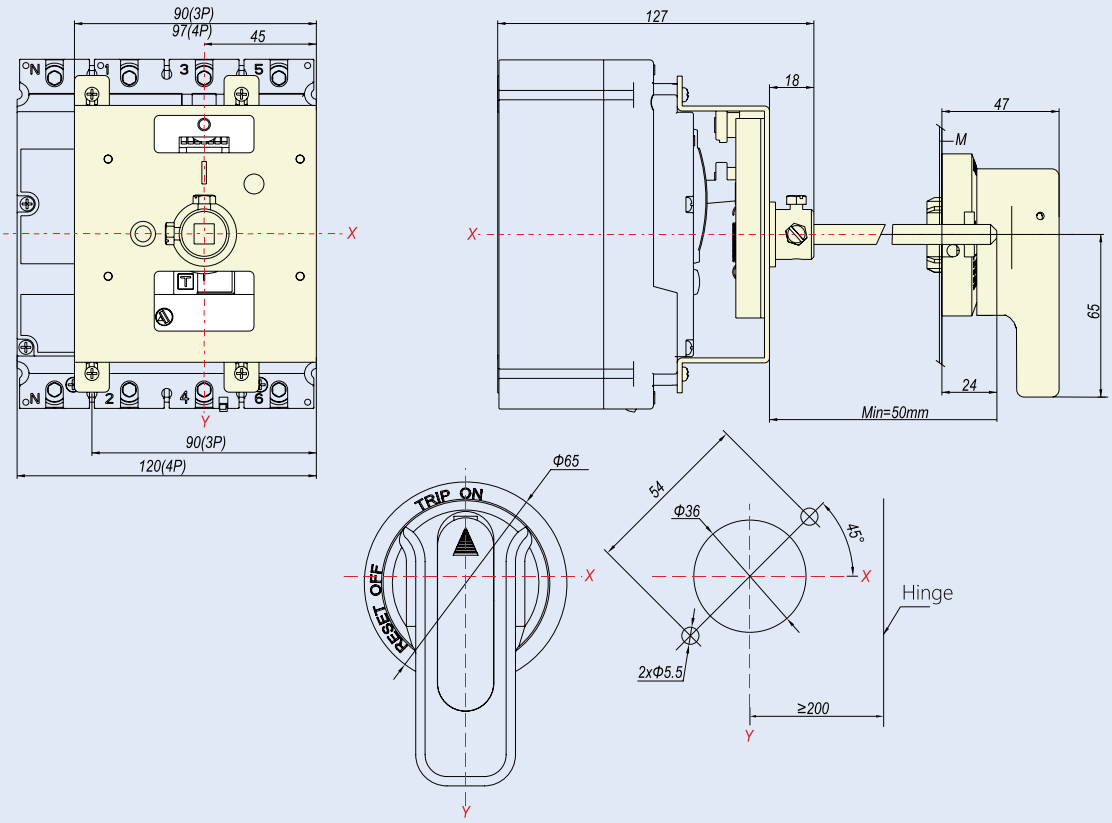

Overall and mounting dimension of SRH22-M8

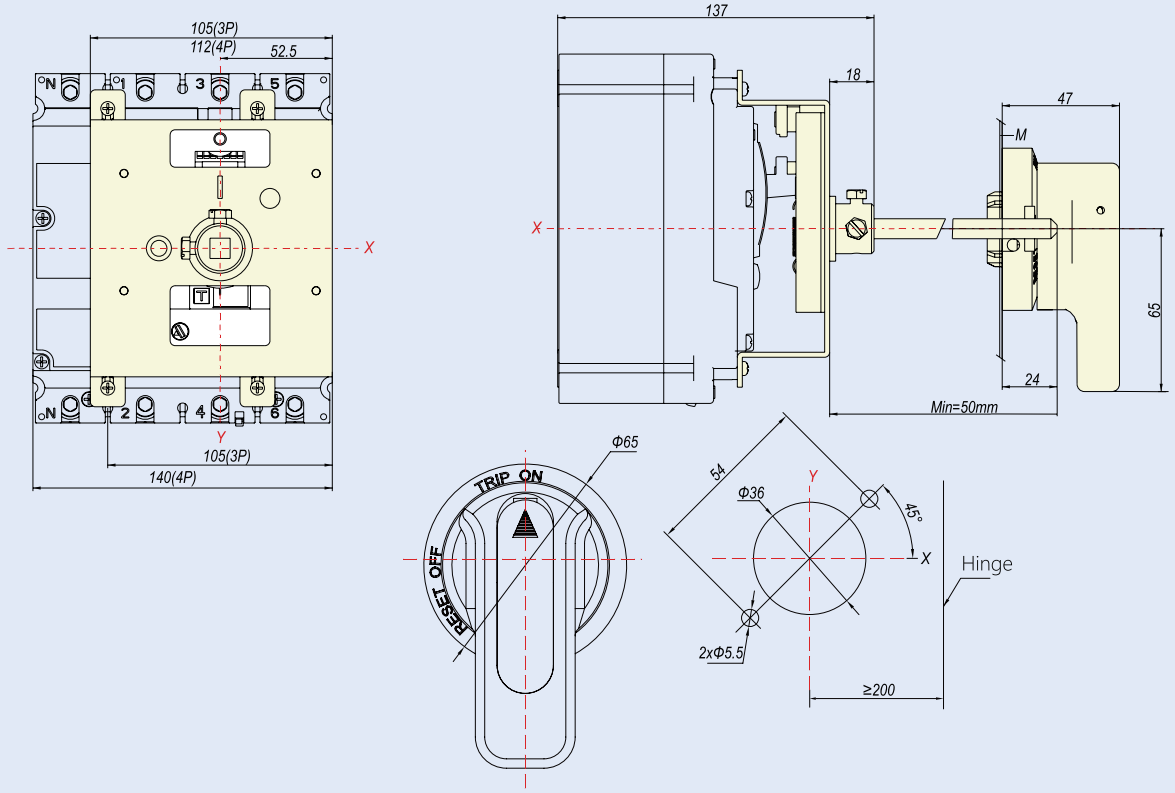

Overall and mounting dimension of SRH23-M8

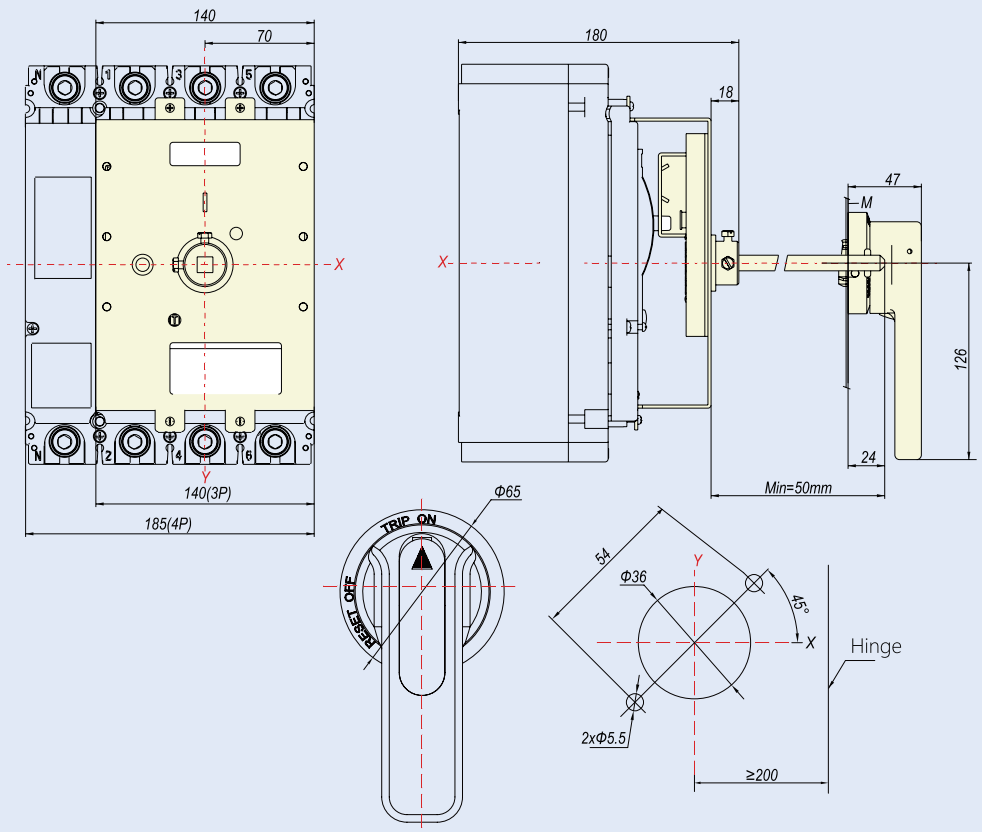

Overall and mounting dimension of SRH24-M8

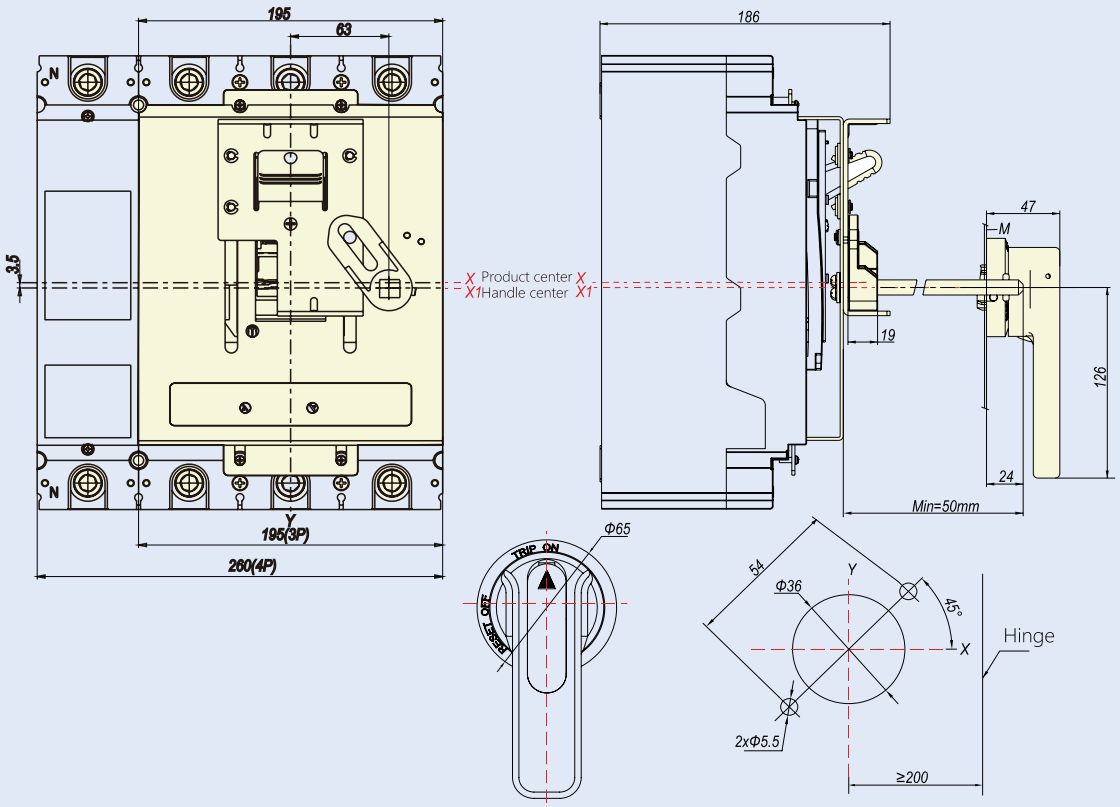

Overall and mounting dimension of SRH25-M8

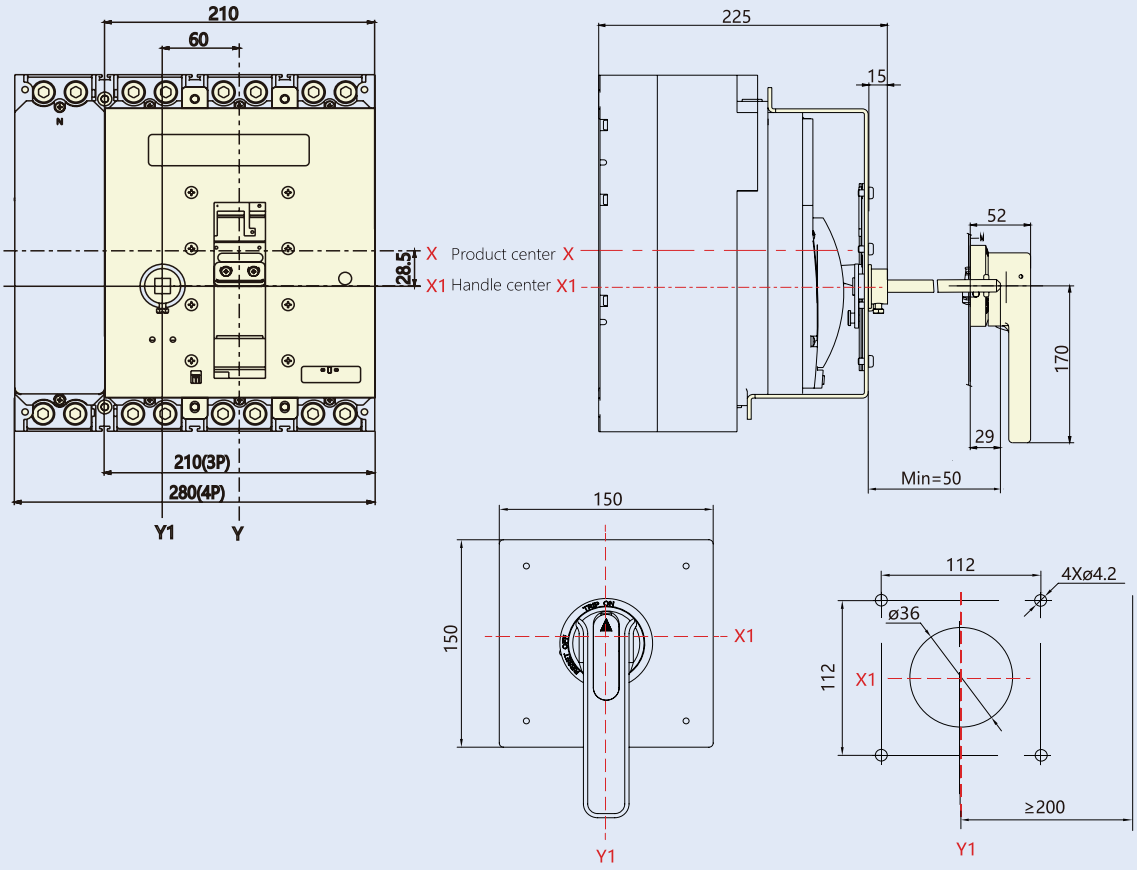

9.7 DRH Direct rotary handle

9.7.1 Function

A unique design and transmission structure enable the circuit breaker to be closed, opened, and reclosed by rotating the handle.

Protection degree: IP40

- Reliable insulation;
- With isolation function indication;
- O (open), I (closed) and free trip 3 position indications;
- The circuit breaker can be locked in the OFF position through 1~3 padlocks with a diameter of
- 5~8mm.
- (Padlock user prepared)

9.7.2 Model description

DRH 21- M8 T

- T: Circuit breaker type: T: Thermal magnetic circuit breaker, M: Magnetic circuit breaker, SD: Switch disconnector; E: Electronic circuit breaker
- M8: Series code:NM8N series
- 21: Frame size code: 21 for 125 frame; 22 for 250 frame; 23 for 400/630 frame;
- DRH: Direct rotary handle code

9.7.3 Installation dimension drawing

Overall dimension of DRH21-M8

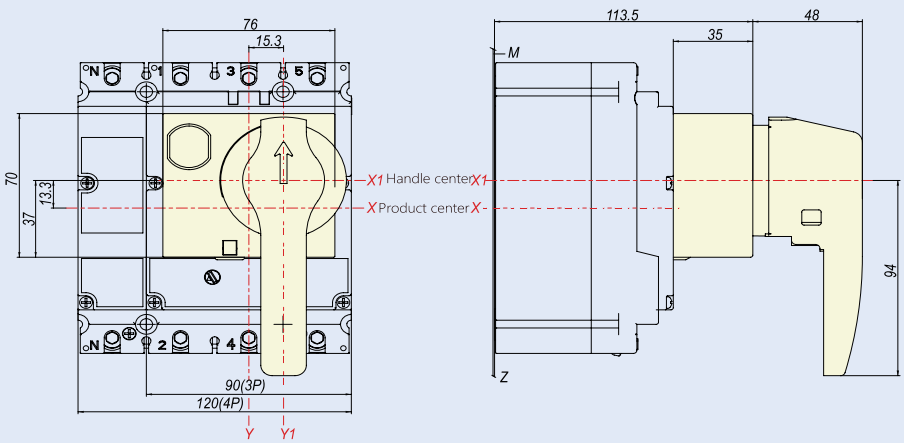

Overall dimension of DRH22-M8

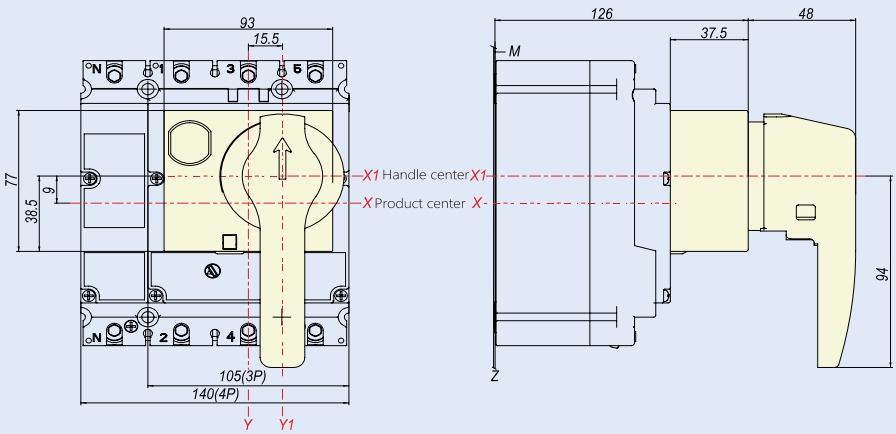

Overall dimension of DRH23-M8

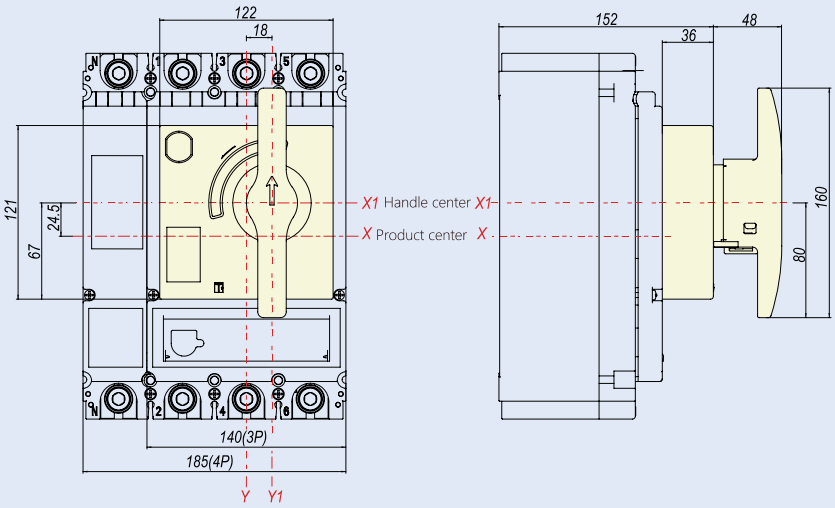

9.8 ERH Extended rotary handle

9.8.1 Function

A unique design and transmission structure enable the circuit breaker to close, open, and reclose by rotating the handle.

Protection degree: IP50

- Reliable insulation;
- With isolation funtion indication;
- O (open), I (closed) and free trip 3 position indications;
- When the switch cabinet door is opened, the setting value of the circuit breaker release can be set;
- When the switch cabinet door is opened, it can prevent the circuit breaker from closing;
- The circuit breaker can be locked in the OFF position using 1 to 3 padlocks with a diameter of 5 to 8mm. This prevents the circuit breaker from closing and ensures the switch cabinet cannot be opened.
- (Padlock user prepared) can prevent the switch cabinet door from opening at this time;
- The rotary handle features an integrated door-interlock function that prevents the cabinet door from opening when the switch is in the ON position. In emergency situations, the cabinet door can be opened using the emergency unlocking device located on the handle.

9.8.2 Model description

DRH 21- M8 T

- T: Circuit breaker type: T: Thermal magnetic circuit breaker, M: Magnetic circuit breaker, SD: Switch disconnector; E: Electronic circuit breaker
- M8: Series code:NM8N series
- 21: Frame size code: 21 for 125 frame; 22 for 250 frame; 23 for 400/630 frame;
- DRH: Extended rotary handle code

Note: default length of shaft is 500mm

9.8.3 Installation dimension drawing

Overall and mounting dimension of ERH21-M8

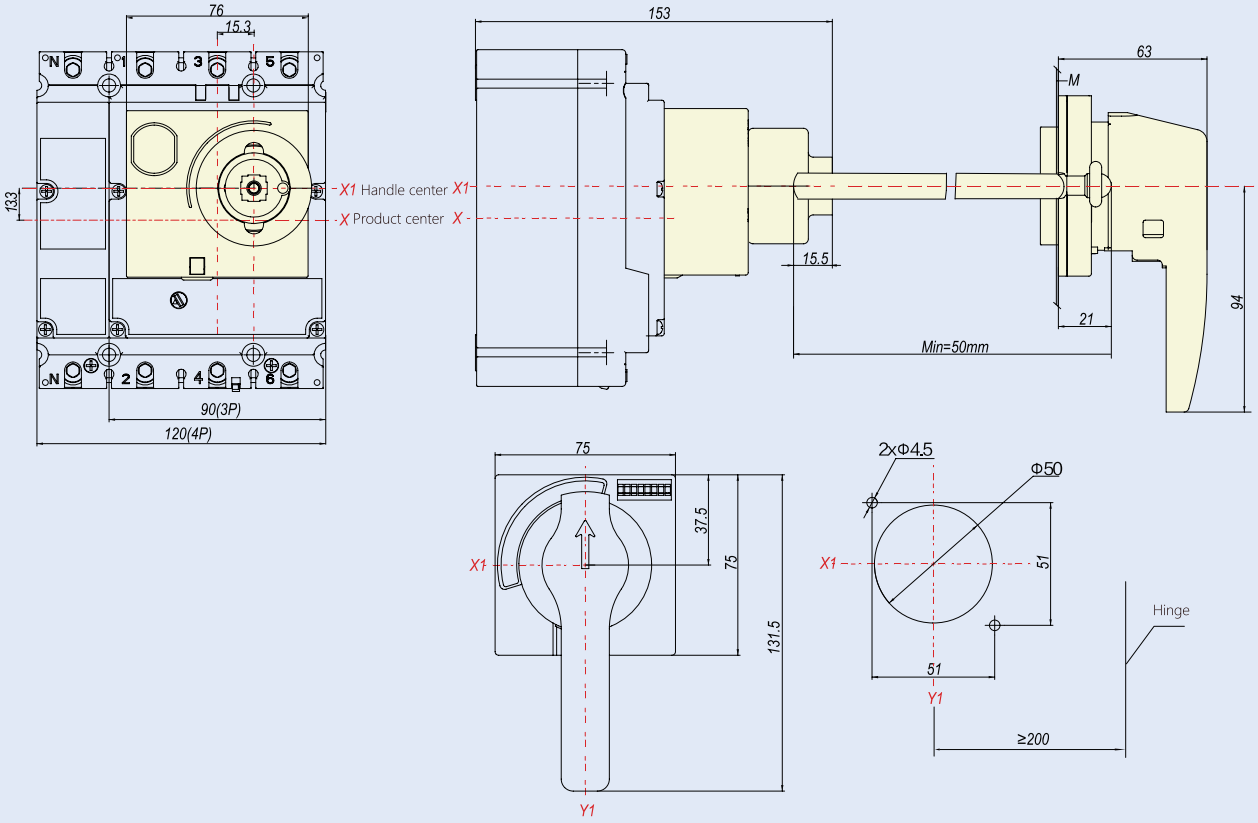

Overall and mounting dimension of ERH22-M8

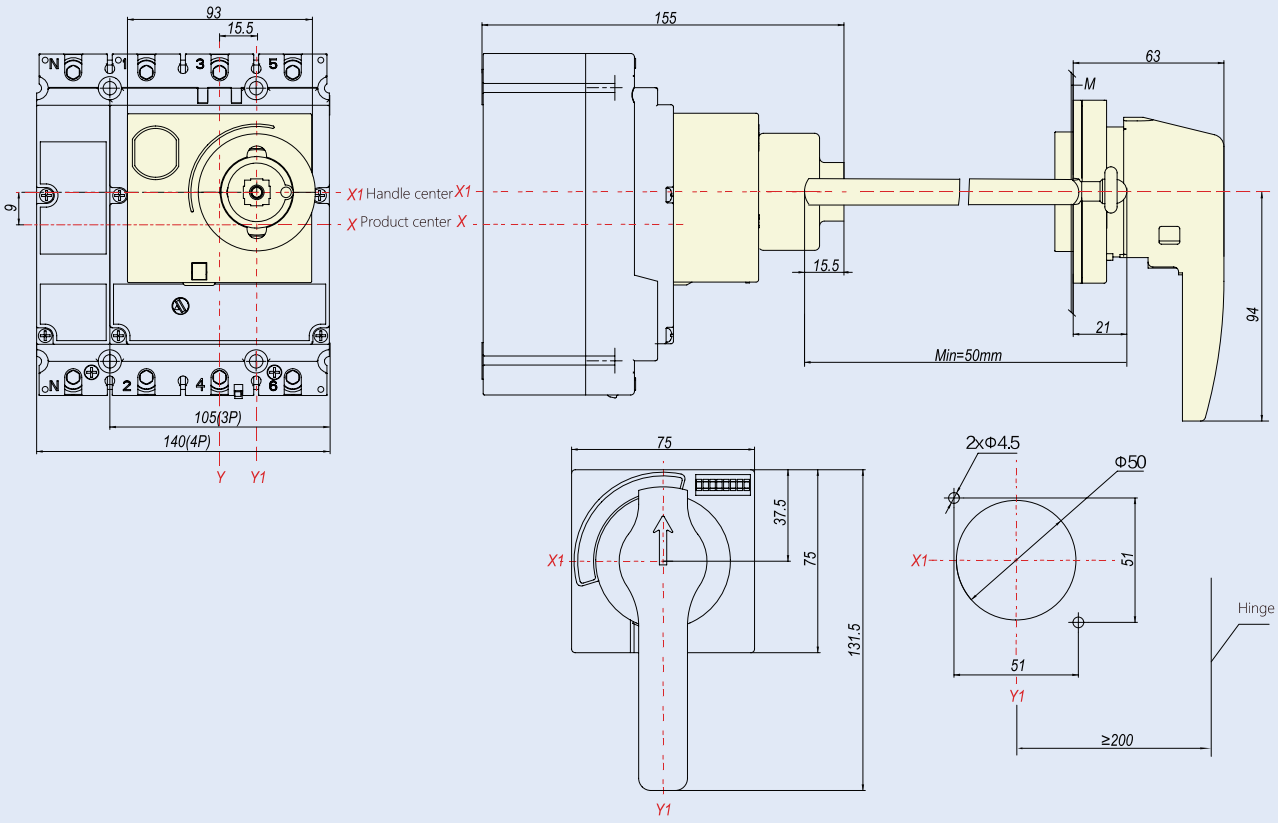

Overall and mounting dimension of ERH23-M8

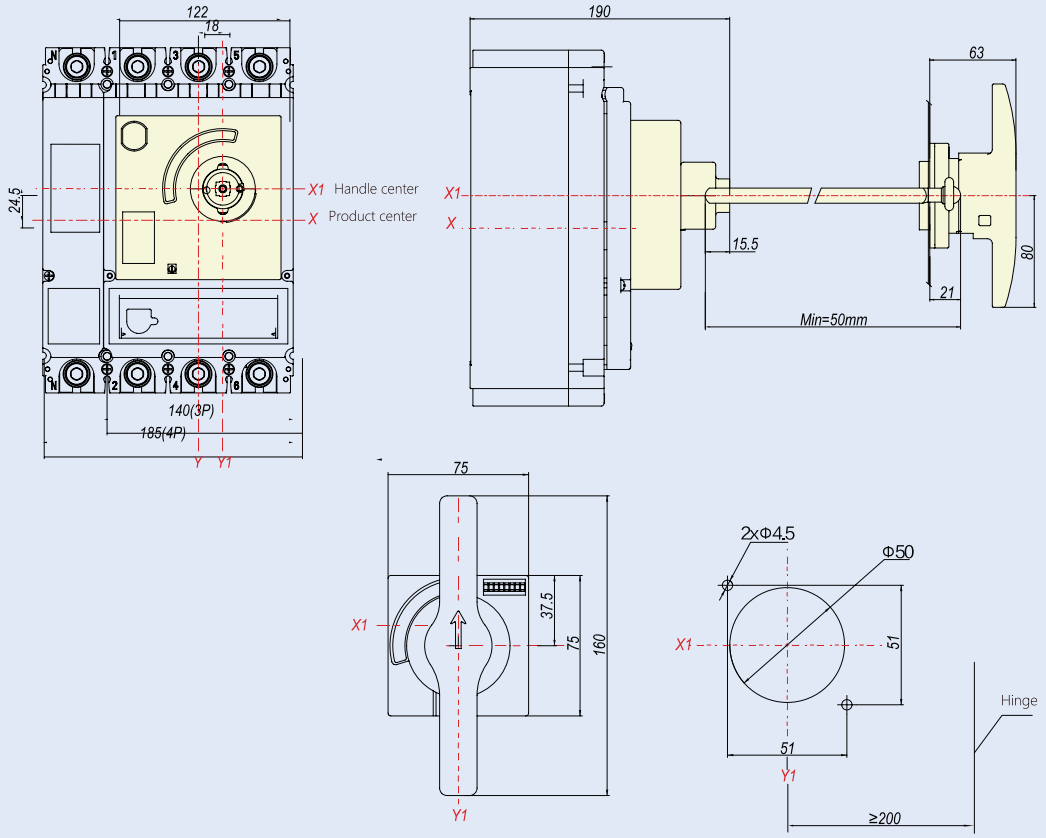

9.9 LHD Extended handle

9.9.1 Function

With a unique design, the circuit breaker can be closed, opened and reclosed by rotating the handle. It is only applicable to 1600A.

9.9.2 Model description

LHD 25- M8

- M8 — Series code:NM8N series
- 25 — Frame size code: 25 for 1600 frame
- LHD — Extended handle code

9.9.3 Overall dimension

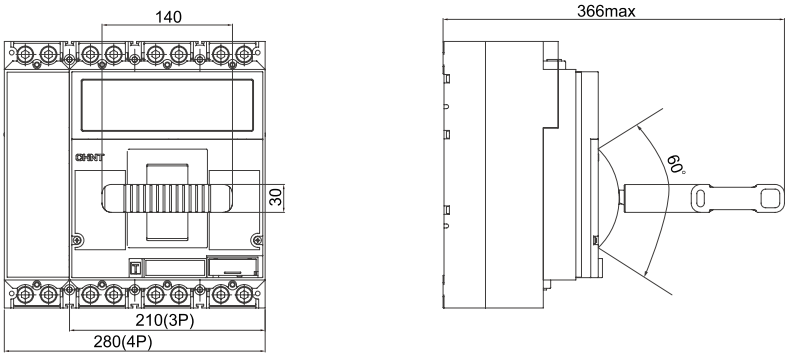

9.10 KLK Locking system

9.10.1 Function

The locking system secures the circuit breaker in the open position.

- It can accommodate 1 to 3 padlocks with a diameter ranging from 5 to 8 mm.
- (Padlock user prepared)

9.10.2 Model description

KLK 21- M8

- M8: Series code:NM8N series
- 21: Frame size code: 21 for 125 frame; 22 for 250 frame; 23 for 400/630 frame;
- KLK: Extended handle code

9.11 MIT Mechanical interlock

9.11.1 Function

When used with two circuit breakers of the same housing dimensions, if one circuit breaker is closed, the interlocking mechanism prevents the other circuit breaker from closing and keeps it in the open state.

9.11.2 Model description

MIT 21- M8 3P

- 3P: Poles: 3P;4P (It is only applicable to 25、250、400、630); 800 No code for shell frame
- M8: Series code:NM8N series
- 21: Frame size code: 21 for 125 frame; 22 for 250 frame; 23 for 400/630 frame; 24 for 800 frame
- MIT: Mechanical interlock code

9.12 TCV Short terminal cover

9.12.1 Function

Prevents contact with the main circuit and can also be used to prevent short circuit between phases.

Protection degree: IP40

For voltages ≥ 500V, terminal covers must be fitted

9.12.2 Model description

TCV 21- M8 3P

- 3P: Poles: 3P;4P
- M8: Series code:NM8N series
- 21: Frame size code: 21 for 125 frame; 22 for 250 frame; 23 for 400/630 frame; 24 for 800 frame
- TCV: Short terminal cover code

9.13 TCE Long terminal cover

9.13.1 Function

Prevents contact with the main circuit and can also be used to prevent short circuit between phases. There are knock-out holes in front of the terminal cover to accommodate various lug cables and front wiring.

Protection degree: IP40

For voltages ≥ 500V, terminal covers must be fitted

9.13.2 Model description

TCE 21- M8 3P

- 3P — Number of poles: 3P;4P
- M8 — Series code:NM8N series
- 21 — Frame size code: 21 for 125 frame; 22 for 250 frame; 23 for 400/630 frame; 24 for 800 frame
- TCE — Long terminal cover code

9.14 FCP Front connection plate

9.14.1 Function

Install this accessory to provide the circuit breaker with flexible wiring capabilities. It increases pole spacing at the inlet and outlet ends, enhancing electrical separation between adjacent poles and improving line safety.

9.14.2 Model description

FCP 25- M8 3P(1600[1])

- 3P(1600[1]) — Number of poles: 1P/2P(only for 125A and 250 frames); 3P; 4P
- M8 — Series code:NM8N series
- 25 — Frame size code: 21 for 125 frame; 22 for 250 frame; 23 for 400/630 frame; 25 for 1600 frame
- FCP — Front connection plate code

Note[1]: Only applicable to 1600 frame, there are three specifications of 1000, 1250, 1600.

9.15 RCP Rear connection plate

9.15.1 Function

Install this accessory to provide the circuit breaker with flexible wiring capabilities. It enables wiring from behind the board .

9.15.2 Model description

RCP 25- M8 2P

- 2P — Number of poles: 1P/2P(only for 125A and 250 frames); 3P; 4P
- M8 — Series code:NM8N series
- 25 — Frame size code: 21 for 125 frame; 22 for 250 frame; 23 for 400/630 frame; 24 for 800 frame
- RCP — Rear connection plate code

9.16 CCT Cage clamp terminal

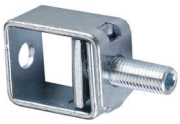

CCT21/22-M8

CCT23-M8

9.16.1 Function

Install this accessory to provide the circuit breaker with flexible wiring capabilities. It enables direct connection to bare cables.

9.16.2 Model description

CCT 21- M8

- M8: Series code:NM8N series
- 21: Frame size code: 21 for 125 frame; 22 for 250 frame; 23 for 400/630 frame
- CCT: Cage clamp terminal code

9.16.3 Wiring capacity

Serial No.	Wiring capacity	Terque
CCT21-M8	(2.5~75)mm^2	8N·m
CCT22-M8	(10~120)mm^2	10N·m
CCT23-M8	(120~240)mm^2	35N·m

9.17 MC Cable connector

9.17.1 Function

This connector enables direct connection of bare wires and facilitate the connection of multiple wires to the circuit breaker.

9.17.2 Model description

MC 25- M8(3) (1250[1])

- (1250[1]): Current specifications
- (3): Number of external holes: (1) 1 hole; (2) 2 holes; (3) 3 holes; (4) 4 holes; (6) 6 holes
- M8: Series code:NM8N series
- 25: Frame size code: 21 for 125 frame; 22 for 250 frame; 23 for 400/630 frame; 24 for 800 frame; 25 for 1600 frame;
- MC: Cable connector code

Note[1]: Only available for 1600AF size MCCB and for ratings from 800A to 1250A.

9.17.3 Wiring capacity

Serial No.	Wiring capacity	Torgue	Note
MC21-M8 (1)	(16~95)mm^2	10N·m	1 hole
MC22-M8 (1)	(35~240)mm^2	30N·m	1 hole
MC22-M8 (2)	2×(35~120)mm^2	30N·m	2 holes
MC22-M8 (6)	6×(10~35)mm^2	10N·m	6 holes
MC23-M8 (2)	2×(120~240)mm^2	35N·m	2 holes
MC23-M8 (4)	4×95mm^2	15N·m	4 holes
MC24-M8 (2)	2×240mm^2	35N·m	2 holes
MC25-M8(800) (3)	3×(95~300)mm^2	35N·m	3 holes
MC25-M8(1000/1250) (4)	4×(95~240)mm^2	35N·m	4 holes

9.18 PIA Plug-in base

9.18.1 Function

This system allows for quick replacement of the circuit breaker without touching the connections at the incoming and outgoing of the base.

- The plug-in base can be pre-installed, making it convenient for future additions of circuit breakers.
- When mounted through a panel, the device isolates the power circuits, acting as a barrier for the connections of the plug-in base.

9.18.2 Model description

PIA 21F- M8 3P

- 3P: Number of holes: 3P; 4P
- M8: Series code:NM8N series
- F: Code of wiring method: F for front connection; B for rear connection
- 21: Frame size code: 21 for 125 frame; 22 for 250 frame; 23 for 400/630 frame;
- PIA: Plug-in base code

9.19 PISD plug-in safety device

9.19.1 Function

This device is used together with the plug-in base to ensure that the circuit breaker trips automatically if it is pulled out while closed.

9.19.2 Model description

PISD 21-M8 T

- T — Circuit breaker type: T thermal magnetic circuit breaker; E electronic circuit breaker
- M8 — Series code:NM8N series
- 21 — Frame size code: 21 for 125 frame; 22 for 250 frame; 23 for 400/630 frame;
- PISD — Plug-in safety device code

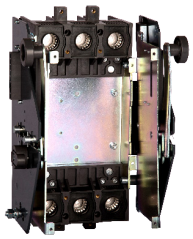

9.20 DOB Withdrawable base

9.20.1 Function

- This system allows for quick replacement of the circuit breaker without touching the connections at the incoming and outgoing of the base.
- The withdrawable base can be pre-installed, making it convenient for future additions of circuit breakers.
- The optional plug-in safety device can be used together to ensure that the circuit breaker trips automatically if it is pulled out while closed.

9.20.2 Model description

DOB 23F- M8 3P(400A)[1)]

- 3P — Number of poles: 3P; 4P
- M8 — Series code:NM8N series
- F — Code of wiring method: F for front connection; B for rear connection
- 23 — Frame size code: 23 for 400/630 frame; 24 for 800 frame
- DOB — Draw-out base code

Note[1)]: DOB23 is suitable for 400/630 housings. There are two specifications of 400 and 630.

9.21 DRA DIN-rail adapter

9.21.1 Function

This accessory enables the circuit breaker to be mounted on a 35mm DIN rail.

9.21.2 Model description

DRA 21-M8 3P

- 3P — Number of poles: 3P; 4P
- M8 — Series code:NM8N series
- 21 — Frame size code: 21 for 125 frame; 22 for 250 frame;
- DRA — DIN-rail adapter code

9.22 COMA Communication module

9.22.1 Function

The COMA communication module is an interface that facilitates communication between the MCCB with electronic trip unit and the bus system, performing both communication and relay control output. Utilizing the Modbus-RTU communication protocol, this module easily connects with a fieldbus master device to achieve up to four remote functions.

The technical parameters are as follows:

- Rated voltage: AC230V or DC24V (error range ± 15%)
- Communication type: RS485 (Modbus-RTU protocol)
- Contact capacity: AC250V / 3A; DC30V / 3A
- Transmission media: shielded twisted pair
- Transmission distance: 1.2km (using category A shielded twisted pair)
- Working status indication: LED indication
- Number of stations: 1 station

9.22.2 Model description

COMA 22- M8 DC24V 0.5m

- 0.5m — Cable length
- DC24V — Rated voltage: AC230V, DC24V
- M8 — Series code:NM8N series
- 22 — Frame code: 22 is a universal accessory for electronic molded case circuit breakers
- COMA — Communication module code

9.22.3 Communication solution

Solutions	Achievable function	Required products and accessories	Note
Solution 1	Remote measure	NM8N basic or standard electronic molded case circuit breaker; COMA22-M8 communication module.	1. Read phase current
Solution 2	Remote measure Remote signal	NM8N basic or standard electronic moulded case circuit breaker; COMA22-M8 communication module; AX auxiliary contact (optional, indicating opening and closing status); AL alarm contact (optional, indicating trip status).	1. Read phase current 2. Indicate circuit breaker position information (open, closed, trip status)
Solution 3	Remote measure Remote signal Remote control	NM8N basic or standard electronic moulded case circuit breaker; COMA22-M8 communication module; AX auxiliary contact (optional, indicating opening and closing status); AL alarm contact (optional, indicating trip status); MOD electric operation mechanism.	1. Read phase current 2. Indicate circuit breaker position information (open, closed, trip status) 3. Control circuit breaker opening and closing
Solution 4	Remote measure Remote signal Remote control Remote adjustment	NM8N standard electronic molded case circuit breaker; COMA22-M8 communication module; AX auxiliary contact (optional, indicating opening and closing status); AL alarm contact (optional, indicating trip status); MOD electric operation mechanism.	1. Read phase current 2. Indicate circuit breaker position information (open, closed, trip status) 3. Control circuit breaker opening and closing 4. Adjust the internal parameter settings of the controller (only for standard specifications. For details, please refer to the communication protocol).

9.23 PSU battery box

9.23.1 Function

Provide DC 9V power for the standard (liquid crystal) controller for users to view, set and modify controller parameters, when current under 0.4In. The batteries inside box are changeble.
Output voltage: DC 9V
Continuous power supply time: 7 hours

9.23.2 Model description

PSU 22-M8

- M8 — Series code:NM8N series
- 22 — Frame size code: 22 is a universal accessory for standard (liquid crystal) electronic molded case circuit breakers
- PSU — Battery box code

9.24 Phase barrier

9.24.1 Function

Guarantees phase-to-phase insulation safety and prevents phase-to-phase short circuit.

9.24.2 Model description

PHS 21-M8

- M8 — Series code:NM8N series
- 21 — Shell code: 21 for 125 frame; 22 for 250 frame; 23 for 400/630 frame; 24 for 800 frame; 25 for 1600 frame
- PHS — Phase barrier code, standard accessory

9.25 Installation diagram of internal accessories

Accessory name	Mounting and wiring mode		Left ON Right Handle OFF		
	NM8N-125, 250 NM8NL-125, 250	NM8N-400, 630 NM8NL-400, 630	NM8N-800	NM8N-1600	NM8N-1600 MOD
	3P, 4P	3P, 4P	3P, 4P	3P, 4P	3P, 4P
No accessory					
Alarm contact					
Auxiliary contact		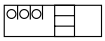	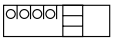		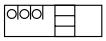
Shunt release					
Under-voltage release					
Shunt release Auxiliary contact					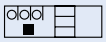
Auxiliary contact Under-voltage telease					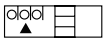
Shunt release Alarm contact					
Auxiliary contact Alarm contact					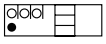
Under-voltage release Alarm contact					
Shunt release Auxiliary contact, alarm					
Auxiliary contact alarm contact Under-voltage release					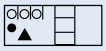

■-Shunt release ▲-Under-voltage release ○-Auxiliary contact ●-Alarm contact

Note: a. NM8N-125, 250, 400, 630, 800 cannot be eqipped with undervoltage release and shunt release at the same time;

b. NM8N-125, 250 3P/4P can be equipped with a maximum of 2 sets of auxiliary contacts; 1P has no internal accessories; 2P can be equipped with a maximum of one auxiliary / alarm contact at the same time;

c. NM8N-400, 630 can install up to 3 sets of auxiliary contacts;

d. NM8N-800 can be eqipped with up to 4 auxiliary contacts;

e. NM8N-1600 MOD can be equipped with a maximum of 3 sets of auxiliary contacts, and can simultaneously install undervoltage release and shunt release;

f. NM8N series can only be equipped with one alarm contact.

10. Technical Supplement

10.1 DC application wiring method

Solutions	Unipolar grounding system	Ungrounded system
Circuit diagram	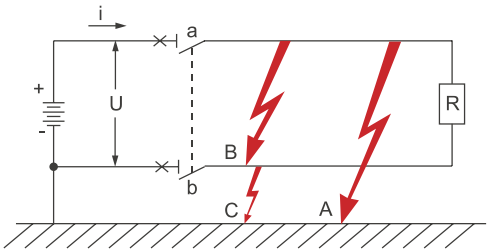	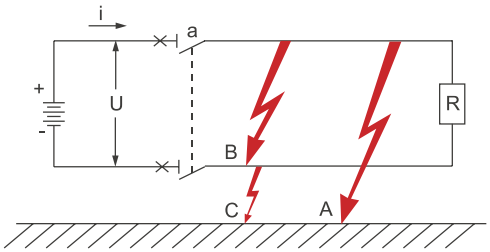
Impact of falt	Fault A: maximum short-circuit current I_{sc} Fault B: maximum short-circuit current I_{sc} Fault C: has no effect	Fault A: has no effect Fault B: maximum short-circuit current I_{sc} Fault C: has no effect
≤DC500V	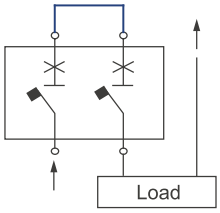 Note: 1. The upper and lower lines can be used, here the following lines are taken as an example.	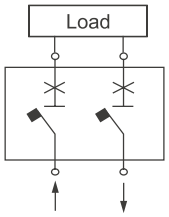 Note: 1. Both the upper and lower lines can be used, here the following lines are taken as an example; 2. Make sure that the installation method does not cause a secondary ground fault.
DC500~750V	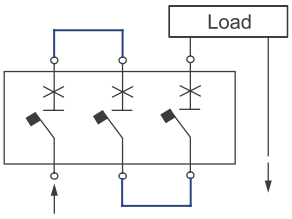 Note: 1. The upper and lower lines can be used, here the following lines are taken as an example.	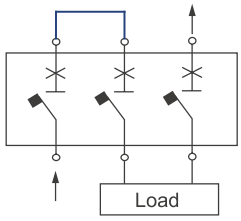 Note: 1. Both the upper and lower lines can be used, here the following lines are taken as an example; 2. Make sure that the installation method does not cause a secondary ground fault.
DC750~1000V	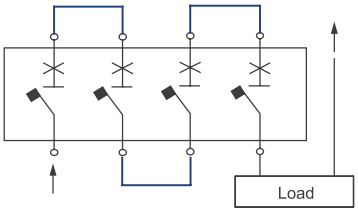 Note: 1. The upper and lower lines can be used, here the following lines are taken as an example.	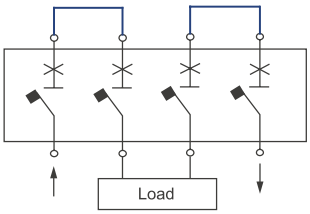 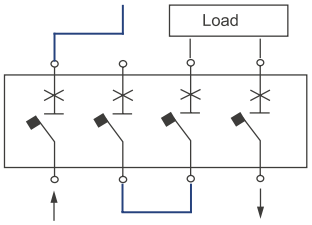

10.2 NM8N power loss table

Release type	Model	Rated current (A)	Fixed circuit breaker resistance loss per pole mΩ	Power loss per pole (W)
Thermal magnetic	NM8N-125	16	8.8	2.3
		20	8.8	3.5
		25	5.2	3.3
		32	4.5	4.6
		40	2.6	4.2
		50	1.8	4.5
		63	1.7	6.7
		80	1.3	8.3
		100	0.88	8.8
		125	0.8	12.5
	NM8N-250	125	0.7	10.9
		160	0.55	14.1
		180	0.55	17.8
		200	0.55	22.0
		225	0.4	20.3
		250	0.4	25.0
	NM8N-400	250	0.35	21.9
		315	0.25	24.8
		350	0.25	30.6
		400	0.15	24.0
	NM8N-630	400	0.15	24.0
		500	0.12	30.0
	NM8N-800	500	0.08	20.0
		630	0.08	31.8
		700	0.08	39.2
		800	0.08	51.2
	NM8N-1600	800	0.08	51.2
		1000	0.08	80.0
		1250	0.04	62.5
		1600	0.04	102.4
Electronic	NM8N-250	32	0.8	0.8
		63	0.4	1.6
		100	0.4	4.0
		160	0.4	10.2
		250	0.4	25.0
	NM8N-400	250	0.15	9.4
		400	0.15	24.0
	NM8N-630	400	0.15	24.0
		630	0.12	47.6
	NM8N-800	800	0.08	51.2
	NM8N-1600	800	0.08	51.2
		1000	0.08	80.0
		1250	0.04	62.5
		1600	0.04	102.4
Switch disconnector	NM8NSD-125	63	0.8	3.2
		100	0.8	8.0
		125	0.8	12.5
	NM8NSD-250	125	0.4	6.3
		160	0.4	10.2
		200	0.4	16.0
		250	0.4	25.0
	NM8NSD-400	250	0.15	9.4
		400	0.15	24.0
	NM8NSD-630	630	0.12	47.6
	NM8NSD-800	800	0.08	51.2

10.3 NM8N thermal magnetic circuit breaker rated operational current and temperature compensation coefficient table

Rated current \ Ambient temperature		-40℃	-35℃	-25℃	-15℃	-5℃	0℃	+10℃	+20℃	+30℃	+40℃	+50℃	+60℃	+70℃
NM8N-125	16A	22.5	22	20.5	20	19.5	19	18.5	17.5	17	16	15	14.5	14
	20A	28	27.5	26.5	25.5	24.5	24	23	22	21	20	19.5	18.5	18
	25A	35	34	33	32	30.5	30	28	27	26	25	24	22.5	22
	32A	45	44	42	41	39	38	37	35	33	32	30.5	29	28
	40A	56	55	53	51	49	48	46	44	42	40	37	33.5	29
	50A	70	68.5	66	64	61	60	57.5	55	52.5	50	47.5	45	40
	63A	88	86.5	83	80	77	75	72	69	66	63	58.5	53	46
	80A	112	110	106	102	98	96	92	88	84	80	74.5	67	56
	100A	140	137	132	127	122	120	115	110	105	100	93	84	80
	125A	175	172	165	159	153	150	144	137	131	125	116	105	91
NM8N-250	125A	175	172	165	159	153	150	144	137	131	125	118	106	96
	160A	224	220	212	204	196	192	184	176	168	160	152	136	120
	180A	252	247	238	229	220	216	207	198	189	180	171	157	144
	200A	280	275	265	255	245	240	230	220	210	200	190	175	166
	225A	315	309	300	288	276	270	259	247	236	225	213	196	180
	250A	350	343	332	319	306	300	287	275	262	250	237	218	207
NM8N-400	250A	350	343	332	319	306	300	287	275	262	250	237	225	212
	315A	441	433	418	402	386	378	362	346	331	315	300	286	271
	350A	490	481	465	447	429	420	402	385	367	350	332	295	276
	400A	560	550	530	510	490	480	460	440	420	400	380	360	320
NM8N-630	250A	350	343	332	319	306	300	287	275	262	250	237	225	212
	315A	441	433	418	402	386	378	362	346	331	315	300	286	271
	350A	490	481	465	447	429	420	402	385	367	350	332	295	276
	400A	560	550	530	510	490	480	460	440	420	400	380	360	320
	500A	700	687	662	637	612	600	575	550	525	500	450	406	360
NM8N-800	500A	700	687	662	637	612	600	575	550	525	500	490	460	400
	630A	882	866	836	804	772	756	724	693	661	630	580	530	490
	700A	980	962	927	892	857	840	805	770	735	700	670	645	575
	800A	1120	1100	1060	1020	980	960	920	880	840	800	735	670	625
NM8N-1600	800A	1120	1100	1060	1020	980	960	960	920	840	800	760	696	640
	1000A	1400	1375	1325	1275	1225	1200	1200	1150	1050	1000	950	870	800
	1250A	1750	1718	1656	1594	1531	1500	1500	1437	1312	1250	1187	1088	1000
	1600A	2240	2200	2120	2040	1960	1920	1960	1760	1680	1600	1520	1390	1280

Note: 1) For a muiti-pole DC circuit breaker, if a 2m long standard wire is used in series, the derating factor above applies.

2) When the DC jumper is connected in series, it needs to be further reduced based on the above table (except NM8NDC-1600). The specific derating factor should be determined by users according to their different wiring methods. Derating by a factor of 0.8.

10.4 NM8N electronic circuit breaker rated operational current and temperature compensation coefficient table

Rated current \ Ambient temperature		-25℃	-15℃	-5℃	0℃	+10℃	+20℃	+30℃	+40℃	+50℃	+60℃	+70℃
NM8N-250	32A	32	32	32	32	32	32	32	32	32	32	32
	63A	63	63	63	63	63	63	63	63	63	63	63
	100A	100	100	100	100	100	100	100	100	100	100	100
	160A	160	160	160	160	160	160	160	160	160	160	160
	250A	250	250	250	250	250	250	250	250	240	225	213
NM8N-400	250A	250	250	250	250	250	250	250	250	250	250	250
	400A	400	400	400	400	400	400	400	400	380	360	340
NM8N-630	250A	250	250	250	250	250	250	250	250	250	250	250
	400A	400	400	400	400	400	400	400	400	380	360	340
	630A	630	630	630	630	630	630	630	630	600	570	540
NM8N-800	630A	630	630	630	630	630	630	630	630	630	630	630
	800A	800	800	800	800	800	800	800	800	760	720	680
NM8N-1600	800A	800	800	800	800	800	800	800	800	800	800	800
	1000A	1000	1000	1000	1000	1000	1000	1000	1000	1000	1000	1000
	1250A	1250	1250	1250	1250	1250	1250	1250	1250	1250	1250	1250
	1600A	1600	1600	1600	1600	1600	1600	1600	1600	1520	1440	1360

Note: Individual product specifications need to be derated at temperatures of 50°C and above. Refer to the provided table for parameters, and adjust Ir to the corresponding setting.

For example: NM8N-250 EN 250 3P products are used at 70℃ . The product needs to be derated to 213A, and the Ir position is adjusted to 0.8In position. The NM8N-250 EM 250 3P product is used at 70℃ .

10.5 Derating factor table for circuit breaker with residual current protection module

Model		Derating factor
NM8N-125+NM8NL-125	16A~63A	1
	80A~100A	0.9
	125A	0.8
NM8N-250+NM8NL-250	125A~180A	1
	200A~250A	0.9
NM8N-250+NM8NL-250 electronic type	32A、63A、100A、160A	1
	250A	0.95
NM8N-400+NM8NL-400	250A	1
	315A、350A	0.96
	400A	0.93
NM8N-400+NM8NL-400 electronic type	250A	1
	400A	0.95
NM8N-630+NM8NL-630	400A	0.93
	500A	0.87
NM8N-630+NM8NL-630 electronic type	400A~500A	1
	630A	0.90

10.6 Derating factor table for circuit breakers with plug-in or draw-out accessories

Model		Derating factor	
		+Plug-in type	+Economic draw-out type
NM8N-125	16A-100A	1	/
	125A	0.95	/
NM8N-250	125A-180A	1	/
	200A-250A	0.95	/
NM8N-250 electronic type	32A、63A、100A、160A	1	/
	250A	0.95	/
NM8N-400	250A-400A	1	1
NM8N-400 electronic type	250A-400A	1	1
NM8N-630	400A	1	1
	500A	0.95	1
NM8N-630 electronic type	400A-500A	1	1
	630A	0.9	0.9
NM8N-800	500-700A	/	0.95
	800A	/	0.9
NM8N-800 electronic type	630A	/	1
	800A	/	0.9

10.7 NM8N Derating factor table for circuit breakers altitude

Altitude (m)			2000m	3000m	4000m	5000m
Rated operational current In			1×In	0.96×In	0.93×In	0.9×In
Rated operational voltage Ue (V)		AC	690	550	480	420
		DC (4pole string)	1000	900	850	800
Rated insulation voltage Ui (V)			1000	930	870	800
Dielectric properties (V)	AC	Uimp = 8kV	2200	2050	1900	1770
		Uimp = 12kV	2550	2370	2200	2050
	DC	Uimp = 8kV	3110	2892	2705	2488
		Uimp = 12kV	3600	3350	3110	2985
Rated insulation impulse voltage Uimp (kV)		NM8N-125 NM8N-250 NM8N-1600	8	8	8	8
		NM8N-400 NM8N-630 NM8N-800	12	10	8	8

10.8 Cascading (AC220/230/240V)

Upstream	NM8N-125					NM8N-250					NM8N-400					NM8N-630					NM8N-800				
Breaking capacity (kA rms)	C	S	Q	H	R	C	S	Q	H	R	C	S	Q	H	R	C	S	Q	H	R	C	S	Q	H	R
	36	50	70	100	150	36	50	70	100	150	36	50	70	100	150	36	50	70	100	150	36	50	70	100	150
Downstream	**Breaking capacity (kA rms)**																								
NB1N	25	30	40	60	60	25	30	40	60	60	—	—	—	—	—	—	—	—	—	—	—	—	—	—	—
NB1H	30	40	50	65	65	30	40	50	65	65	—	—	—	—	—	—	—	—	—	—	—	—	—	—	—
NM8N-125C		50	60	80	100		50	60	80	100		50	60	80	100		50	60	80	100		50	60	80	100
NM8N125S			70	90	120			70	90	120			70	90	120			70	90	120			70	90	120
NM8N-125Q				90	140				90	140				90	140				90	140				90	140
NM8N-125H					150			60		150					150					150					150
NM8N-250C							50	70	80	100		50	60	80	100		50	60	80	100		50	60	80	100
NM8N-250S									90	120			70	90	120			70	90	120			70	90	120
NM8N-250Q									90	140				90	140				90	140				90	140
NM8N-250H										150					150					150					150
NM8N-400C												50	60	80	100		50	60	80	100		50	60	80	100
NM8N-400S													70	90	120			70	90	120			70	90	120
NM8N-400Q														90	140				90	140				90	140
NM8N-400H															150					150					150
NM8N-630C																	50	60	80	100		50	60	80	100
NM8N-630S																		70	90	120			70	90	120
NM8N-630Q																			90	140				90	140
NM8N-630H																				150					150
NM8N-800C																						50	60	80	100
NM8N-800S																							70	90	120
NM8N-800Q																								90	140
NM8N-800H																									150

10.9 Cascading (AC380/400/415V)

Upstream	NM8N-125					NM8N-250					NM8N-400					NM8N-630					NM8N-800				
Breaking capacity (kA rms)	C	S	Q	H	R	C	S	Q	H	R	C	S	Q	H	R	C	S	Q	H	R	C	S	Q	H	R
	36	50	70	100	150	36	50	70	100	150	36	50	70	100	150	36	50	70	100	150	36	50	70	100	150
Downstream	**Breaking capacity (kA rms)**																								
NB1N	20	25	25	25	25	20	25	25	25	25	—	—	—	—	—	—	—	—	—	—	—	—	—	—	—
NB1H	30	30	30	30	30	30	30	30	30	30	—	—	—	—	—	—	—	—	—	—	—	—	—	—	—
NM8N-125C		50	50	80	100		50	50	80	100		50	50	80	100		50	50	80	100		50	50	80	100
NM8N125S			70	90	120			70	90	120			70	90	120			70	90	120			70	90	120
NM8N-125Q				90	140				90	140				90	140				90	140				90	140
NM8N-125H					150					150					150					150					150
NM8N-250C							50	50	80	100		50	50	80	100		50	50	80	100		50	50	80	100
NM8N-250S								70	90	120			70	90	120			70	90	120			70	90	120
NM8N-250Q									90	140				90	140				90	140				90	140
NM8N-250H										150					150					150					150
NM8N-400C												50	50	80	100		50	50	80	100		50	50	80	100
NM8N-400S													70	90	120			70	90	120			70	90	120
NM8N-400Q														90	140				90	140				90	140
NM8N-400H															150					150					150
NM8N-630C																	50	50	80	100		50	50	80	100
NM8N-630S																		70	90	120			70	90	120
NM8N-630Q																			90	140				90	140
NM8N-630H																				150					150
NM8N-800C																						50	50	80	100
NM8N-800S																							70	90	120
NM8N-800Q																								90	140
NM8N-800H																									150

Note

10.10 Selective protection

Upstream / Downstream		NM8N-125										NM8N-250						NM8N-250 Electronic				
	In (A)	16	20	25	32	40	50	63	80	100	125	125	160	180	200	225	250	32	63	100	160	250
NB1 Tripping currve:B/C	≤10	190	190	300	400	500	500	500	630	800	1000	T	T	T	T	T	T	400	500	1000	T	T
	16			300	400	500	500	500	630	800	1000	T	T	T	T	T	T	400	500	1000	T	T
	20					500	500	500	630	800	1000	T	T	T	T	T	T		500	1000	T	T
	25						500	500	630	800	1000	T	T	T	T	T	T		500	1000	T	T
	32							500	630	800	1000	2000	5000	T	T	T	T		500	1000	T	T
	40								630	800	1000	2000	5000	T	T	T	T			1000	T	T
	50									800	1000	2000	5000	T	T	T	T			1000	T	T
	63										1000	2000	5000	T	T	T	T			1000	T	T
NM8N-125	16					400	500	500	630	800	1000	1000	2500	2500	2500	2500	2800		500	1000	2500	2800
	50						500	500	630	800	1000	1000	2500	2500	2500	2500	2800		500	1000	2500	2800
	25							500	630	800	1000	1000	2500	2500	2500	2500	2800		500	1000	2500	2800
	32								630	800	1000	1000	2500	2500	2500	2500	2800			1000	2500	2800
	40									800	1000	1000	2000	2000	2500	2500	2800			1000	2000	2800
	50										1000	1000	2000	2000	2500	2500	2800			1000	2000	2800
	63											1000	2000	2000	2500	2500	2800				2000	2800
	80												2000	2000	2500	2500	2800				2000	2800
	100														2500	2500	2800					2800
	125															2500	2800					2800
NM8N-250	125																					
	160																					
	180																					
	200																					
	225																					
	250																					
NM8N-250 Electronic	32																			1000	2000	2800
	63																				2000	2800
	100																					2800
	160																					
	250																					
NM8N-400	250																					
	315																					
	350																					
	400																					
NM8N-400 Electronic	250																					
	400																					
NM8N-630	250																					
	315																					
	350																					
	400																					
	500																					
NM8N-630 Electronic	250																					
	400																					
	630																					

Note: [1] No content, meaning no selectivity.

[2] The number "1000" indicates the selectivity limit for partial discrimination, which is the maximum fault current at which selectivity can be maintained. For currents below 1000A, selectivity can be achieved. However, for fault currents above 1000A, both the upstream and downstream circuit breakers may operate simultaneously.

[2] "T" indicates that full selectivity is maintained up to the rated short-circuit breaking capacity of the downstream circuit breaker.

NM8N-400				NM8N -400 Electronic		NM8N-630					NM8N-630 Electronic			NM8N-800				NM8N -800 Electronic	NM8N-1600				NM8N-1600 Electronic			
250	315	350	400	250	400	250	315	350	400	500	250	400	630	500	630	700	800	800	800	1000	1250	1600	800	1000	1250	1600
T	T	T	T	T	T	T	T	T	T	T	T	T	T	T	T	T	T	T	T	T	T	T	T	T	T	T
T	T	T	T	T	T	T	T	T	T	T	T	T	T	T	T	T	T	T	T	T	T	T	T	T	T	T
T	T	T	T	T	T	T	T	T	T	T	T	T	T	T	T	T	T	T	T	T	T	T	T	T	T	T
T	T	T	T	T	T	T	T	T	T	T	T	T	T	T	T	T	T	T	T	T	T	T	T	T	T	T
T	T	T	T	T	T	T	T	T	T	T	T	T	T	T	T	T	T	T	T	T	T	T	T	T	T	T
T	T	T	T	T	T	T	T	T	T	T	T	T	T	T	T	T	T	T	T	T	T	T	T	T	T	T
T	T	T	T	T	T	T	T	T	T	T	T	T	T	T	T	T	T	T	T	T	T	T	T	T	T	T
T	T	T	T	T	T	T	T	T	T	T	T	T	T	T	T	T	T	T	T	T	T	T	T	T	T	T
T	T	T	T	T	T	T	T	T	T	T	T	T	T	T	T	T	T	T	T	T	T	T	T	T	T	T
T	T	T	T	T	T	T	T	T	T	T	T	T	T	T	T	T	T	T	T	T	T	T	T	T	T	T
T	T	T	T	T	T	T	T	T	T	T	T	T	T	T	T	T	T	T	T	T	T	T	T	T	T	T
T	T	T	T	T	T	T	T	T	T	T	T	T	T	T	T	T	T	T	T	T	T	T	T	T	T	T
2800	3500	4000	5000	2800	5000	2800	3500	4000	5000	T	2800	5000	T	T	T	T	T	T	T	T	T	T	T	T	T	T
2800	3500	4000	5000	2800	5000	2800	3500	4000	5000	T	2800	5000	T	T	T	T	T	T	T	T	T	T	T	T	T	T
2800	3500	4000	5000	2800	5000	2800	3500	4000	5000	T	2800	5000	T	T	T	T	T	T	T	T	T	T	T	T	T	T
2800	3500	4000	5000	2800	5000	2800	3500	4000	5000	T	2800	5000	T	T	T	T	T	T	T	T	T	T	T	T	T	T
2800	3500	4000	5000	2800	5000	2800	3500	4000	5000	T	2800	5000	T	T	T	T	T	T	T	T	T	T	T	T	T	T
2800	3500	4000	5000	2800	5000	2800	3500	4000	5000	T	2800	5000	T	T	T	T	T	T	T	T	T	T	T	T	T	T
2800	3500	4000	5000	2800	5000	2800	3500	4000	5000	T	2800	5000	T	T	T	T	T	T	T	T	T	T	T	T	T	T
2800	3500	4000	5000	2800	5000	2800	3500	4000	5000	T	2800	5000	T	T	T	T	T	T	T	T	T	T	T	T	T	T
	3500	4000	5000		5000		3500	4000	5000	T		5000	T	T	T	T	T	T	T	T	T	T	T	T	T	T
		4000	5000		5000			4000	5000	T		5000	T	T	T	T	T	T	T	T	T	T	T	T	T	T
			5000		5000				5000	T		5000	T	T	T	T	T	T	T	T	T	T	T	T	T	T
			5000		5000				5000	T		5000	T	T	T	T	T	T	T	T	T	T	T	T	T	T
2800	3500	4000	5000	2800	5000	2800	3500	4000	5000	T	2800	5000	T	T	T	T	T	T	T	T	T	T	T	T	T	T
2800	3500	4000	5000	2800	5000	2800	3500	4000	5000	T	2800	5000	T	T	T	T	T	T	T	T	T	T	T	T	T	T
2800	3500	4000	5000	2800	5000	2800	3500	4000	5000	T	2800	5000	T	T	T	T	T	T	T	T	T	T	T	T	T	T
		4000	5000		5000			4000	5000	T		5000	T	T	T	T	T	T	T	T	T	T	T	T	T	T
			5000		5000				5000	T		5000	T	T	T	T	T	T	T	T	T	T	T	T	T	T
					5000				5000	6000			9500	9500	9500	9500	9500	9500	9500	12000	15000	19000	9500	12000	15000	19000
										6000			9500	9500	9500	9500	9500	9500	9500	12000	15000	19000	9500	12000	15000	19000
													9500		9500	9500	9500	9500	9500	12000	15000	19000	9500	12000	15000	19000
															9500	9500	9500	9500	9500	12000	15000	19000	9500	12000	15000	19000
					5000				5000	6000		5000	9500	9500	9500	9500	9500	9500	9500	12000	15000	19000	9500	12000	15000	19000
															9500	9500	9500	9500	9500	12000	15000	19000	9500	12000	15000	19000
					5000				5000	6000			9500	9500	9500	9500	9500	9500	9500	12000	15000	19000	9500	12000	15000	19000
										6000			9500	9500	9500	9500	9500	9500	9500	12000	15000	19000	9500	12000	15000	19000
													9500		9500	9500	9500	9500	9500	12000	15000	19000	9500	12000	15000	19000
															9500	9500	9500	9500	9500	12000	15000	19000	9500	12000	15000	19000
															9500	9500	9500	9500	9500	9500	12500	16000	9500	9500	12500	16000
					5000				5000	6000		5000	9500	9500	9500	9500	9500	9500	9500	12000	15000	19000	9500	12000	15000	19000
															9500	9500	9500	9500	9500	12000	15000	19000	9500	12000	15000	19000
																				9500	12500	16000		9500	12500	16000

11. Ordering notice

11.1 Quick selection of circuit breaker

11.1.1 Quick selection of power distribution and motor protection circuit breakers[1)]

NM8N - 250 S TM 125 4C OTHER

Circuit breaker	Frame current(A)	Breaking capacity code	Release type	Rated current(A)		Poles	Special requirement
NM8N moulded case circuit breaker	125 250 400 630 800	C : 36kA S : 50kA Q : 70kA H : 100kA R : 150kA	M: Magnetic for motor protection TM: Thermal Magnetic for Distribution Protection EN: Electronic Basic for Distribution Protection EM: Electronic Standard for Distribution Protection ENM: Electronic Standard for Motor Protection	TM/M	EN/EM/ENM/EMM	1P : One pole 2P : Two-pole 3P : Three-pole 4B : Four-pole[2)] 4C : Four-pole[2)]	
				125 : 16, 20, 25, 32, 40, 50, 63, 80, 100, 125	—		
				250 : 125, 160, 180, 200, 225, 250	250 : 32, 63, 100 160, 250		
				400 : 250, 315 350, 400	400 : 250, 400	3P : Three-pole 4B : Four-pole[2)] 4C : Four-pole[2)]	
				630 : 400, 500	630 : 400, 630		
				800 : 500, 630 700, 800	800 : 630, 800		
	1600	S : 50kA Q : 70kA H : 100kA	TM: Thermal Magnetic for Distribution Protection EN: Electronic Basic for Distribution Protection EM: Electronic Standard for Distribution Protection	TM/EN/EM		3P : Three-pole 4B : Four-pole[2)] 4C : Four-pole[2)]	MOD DC110[3)] MOD DC220[3)] MOD AC230[3)] MOD AC400[3)]
				1600 : 800, 1000, 1250, 1600			

Note: [1)] For unique requirements beyond the standard technical specifications, please contact our sales or technical department for special order processing. When placing an order, the circuit breaker body and accessories should be listed separately. If factory assembly of the body and accessories should be listed separately. If factory assembly of the body and accessories is required, specify this in the order; otherwise, they will be shipped separately. Note that motor protection is applicable only to 3P/4P configurations.

[2)] 4B: Neutral poles without protection, can be operated with other three poles;
4C: Neutral poles with protection, can be operated with other three poles.

[3)] Only NM8N-1600 has motor type

11.1.2 Quick selection of DC circuit breaker

NM8N

DC	-	250	S	TM	125	2P	OTHER
Current type		Frame current(A)	Breaking capacity code	Release type	Rated current(A)	Poles	Special requirement
DC : Direct current		125 250 400 630 800	B : 25kA C : 36kA S : 50kA Q : 70kA H : 100kA	TM: Thermal Magnetic for Distribution Protection	125 : 16, 20, 25, 32, 40, 50, 63, 80, 100, 125 250 : 125, 160, 180, 200, 225, 250 400 : 250, 315 350, 400 630 : 400, 500 800 : 500, 630 700, 800	1P : One pole[1)] 2P : Two-pole[1)] 3P : Three-pole 4P : Four-pole	
		1600	B : 25kA C : 36kA	TM: Thermal Magnetic for Distribution Protection	1600 : 800, 1000, 1250, 1600	3P : Three-pole 4P : Four-pole	

Note: [1)] 1P / 2P is limited to 125 and 250 frame products.

11.1.3 Quick selection of switch disconnector

NM8N

SD	-	250	AC	125	2P	OTHER
Switch disconnector		**Frame current(A)**	**Release type**	**Rated current(A)**	**Poles**	**Special requirement**
SD : Switch disconnector		125 250 400 630 800	AC: Alternating current DC: Direct current	125 : Default 250 : Default 400 : Default 800 : Default 1600 : 800, 1000,1250, 1600	2P : Two-pole[1] 3P : Three-pole 4P : Four-pole	

Note: [1] 2P is only for 125 and 250 frame products.

Note

11.2 NM8N accessory models selection table

Accessory type	Code	Specification	NM8N-125	NM8N-250	
Auxiliary contact	AX	Universal	AX21-M8		
		Neutral	AX21-M8 N		
Alarm contact	AL	Universal	AL21-M8		
		Neutral	AL21-M8 N		
Shunt release	SHT	AC48V	SHT21-M8 AC48V	SHT22-M8 AC48V	
		AC110V	SHT21-M8 AC110V	SHT22-M8 AC110V	
		AC220-240V	SHT21-M8 AC220-240V	SHT22-M8 AC220-240V	
		AC380-415V	SHT21-M8 AC380-415V	SHT22-M8 AC380-415V	
		DC24V	SHT21-M8 DC24V	SHT22-M8 DC24V	
		DC220V	SHT21-M8 DC220V	SHT22-M8 DC220V	
Under-voltage release	UVT	AC48V	UVT21-M8 AC48V	UVT22-M8 AC48V	
		AC110V	UVT21-M8 AC110V	UVT22-M8 AC110V	
		AC220-240V	UVT21-M8 AC220-240V	UVT22-M8 AC220-240V	
		AC380-415V	UVT21-M8 AC380-415V	UVT22-M8 AC380-415V	
		DC24V	UVT21-M8 DC24V	UVT22-M8 DC24V	
		DC48V	UVT21-M8 DC48V	UVT22-M8 DC48V	
		DC110-120V	UVT21-M8 DC110-120V	UVT22-M8 DC110-120V	
		DC220V	UVT21-M8 DC220V	UVT22-M8 DC220V	
Motor-driven mechanism	MOD	AC110/DC110-120V	MOD21-M8 AC110/DC110-120V	MOD22-M8 AC110/DC110-120V	
		AC220-240/DC220V	MOD21-M8 AC220-240V/DC220V	MOD22-M8 AC220-240V/DC220V	
		AC380-415V	MOD21-M8 AC380-415V	MOD22-M8 AC380-415V	
		DC24V	MOD21-M8 DC24V	MOD22-M8 DC24V	
Economic extended rotart handle	SRH	3P	SRH21-M8 3P	SRH22-M8 3P	
		4P	SRH21-M8 4P	SRH22-M8 4P	
Direct rotary handle	DRH	Thermal magnetic (T)	DRH21-M8 T	DRH22-M8 T	
		Magnetic (M)	DRH21-M8 M	DRH22-M8 M	
		Electronic (E)	/	DRH22-M8 E	
		Switch disconnector (SD)	DRH21-M8 M	DRH22-M8 SD	
Extended rotary handle	ERH	Thermal magnetic (T)	ERH21-M8 T	ERH22-M8 T	
		Magnetic (M)	ERH21-M8 M	ERH22-M8 M	
		Electronic (E)	/	ERH22-M8 E	
		Switch disconnector (SD)	ERH21-M8 M	ERH22-M8 SD	
Extended rotary handle	LHD	3P/4P	/	/	
Locking system	KLK		KLK21-M8	KLK22-M8	
Mechanical interlock	MIT	3P	MIT21-M8 3P	MIT22-M8 3P	
		4P	MIT21-M8 4P	MIT22-M8 4P	
Short terminal cover	TCV	3P	TCV21-M8 3P	TCV22-M8 3P	
		4P	TCV21-M8 4P	TCV22-M8 4P	
Long terminal cover	TCE	3P	TCE21-M8 3P	TCE22-M8 3P	
		4P	TCE21-M8 4P	TCE22-M8 4P	
Front connection plate	FCP	1P	FCP21-M8 1P	FCP22-M8 1P	
		2P	FCP21-M8 2P	FCP22-M8 2P	
		3P	FCP21-M8 3P	FCP22-M8 3P	
		4P	FCP21-M8 4P	FCP22-M8 4P	
Rear connection plate	RCP	1P	RCP21-M8 1P	RCP22-M8 1P	
		2P	RCP21-M8 2P	RCP22-M8 2P	
		3P	RCP21-M8 3P	RCP22-M8 3P	
		4P	RCP21-M8 4P	RCP22-M8 4P	
Cage clamp terminal	CCT	1hole	CCT21-M8	CCT22-M8	
Cable connector	MC	1hole	MC21-M8(1)	MC22-M8(1)	
		2hole	/	MC22-M8(2)	
		3hole	/	/	
		4hole	/	/	
		6hole	/	MC22-M8(6)	
Plug-in base	PIA	3P Front connection	PIA21F-M8 3P	PIA22F-M8 3P	
		4P Front connection	PIA21F-M8 4P	PIA22F-M8 4P	
		3P Rear connection	PIA21B-M8 3P	PIA22B-M8 3P	
		4P Rear connection	PIA21B-M8 4P	PIA22B-M8 4P	
Plug-in safety device	PISD	Thernal magnetic (T)	PISD21-M8 T	PISD22-M8 T	
		Electronic (E)	/	PISD22-M8 E	
Withdrawable base	DOB	3P Front connection	/	/	
		4P Front connection	/	/	
		3P Rear connection	/	/	
		4P Rear connection	/	/	
DIN-rail adapter	DRA				
		3P	DRA21-M8 3P	DRA22-M8 3P	
		4p	DRA21-M8 4P	DRA22-M8 4P	
Communication module	COMA	DC24V	/	COMA22-M8 DC24V 0.5m	
			/	COMA22-M8 DC24V 1.5m	
			/	COMA22-M8 DC24V 3m	
		AC230V	/	COMA22-M8 AC230V 0.5m	
			/	COMA22-M8 AC230V 1.5m	
			/	COMA22-M8 AC230V 3m	
Battery box	PSU		/	PSU22-M8	
Phase barrier	PHS		PHS21-M8	PHS22-M8	

NM8N-400	NM8N-630	NM8N-800	NM8N-1600
AX21-M8			
AX21-M8 N			
AL21-M8			
AL21-M8 N			
SHT22-M8 AC48V		SHT24-M8 AC48V	SHT25-M8 AC48V
SHT22-M8 AC110V		SHT24-M8 AC110V	SHT25-M8 AC110V
SHT22-M8 AC220-240V		SHT24-M8 AC220-240V	SHT25-M8 AC220-240V
SHT22-M8 AC380-415V		SHT24-M8 AC380-415V	SHT25-M8 AC380-415V
SHT22-M8 DC24V		SHT24-M8 DC24V	SHT25-M8 DC24V
SHT22-M8 DC220V		SHT24-M8 DC220V	SHT25-M8 DC220V
UVT22-M8 AC48V		UVT24-M8 AC48V	UVT25-M8 AC48V
UVT22-M8 AC110V		UVT24-M8 AC110V	UVT25-M8 AC110V
UVT22-M8 AC220-415V		UVT24-M8 AC220-240V	UVT25-M8 AC220-240V
UVT22-M8 AC380-415V		UVT24-M8 AC380-415V	UVT25-M8 AC380-415V
UVT22-M8 DC24V		UVT24-M8 DC24V	UVT25-M8 DC24V
UVT22-M8 DC48V		UVT24-M8 DC48V	UVT25-M8 DC48V
UVT22-M8 DC110-120V		UVT24-M8 DC110-120V	UVT25-M8 DC110-120V
UVT22-M8 DC220V		UVT24-M8 DC220V	UVT25-M8 DC220V
MOD23-M8 AC110/DC110-120V		MOD24-M8 AC110/DC110-120V	MOD25-M8 AC110/DC110-120V
MOD23-M8 AC220-240V/DC220V		MOD24-M8 AC220-240V/DC220V	MOD25-M8 AC220-240V/DC220V
MOD23-M8 AC380-415V		MOD24-M8 AC380-415V	MOD25-M8 AC380-415V
MOD23-M8 DC24V		MOD24-M8 DC24V	MOD25-M8 DC24V
SRH23-M8		SRH24-M8	SRH25-M8
DRH23-M8 T		/	/
DRH23-M8 M		/	/
DRH23-M8 E		/	/
DRH23-M8 SD		/	/
ERH23-M8 T		/	/
ERH23-M8 M		/	/
ERH23-M8 E		/	/
ERH23-M8 SD		/	/
/		/	LHD25-M8
KLK23-M8		/	/
MIT23-M8 3P		MIT24-M8	/
MIT23-M8 4P			/
TCV23-M8 3P		TCV24-M8 3P	/
TCV23-M8 4P		TCV24-M8 4P	/
TCE23-M8 3P		TCE24-M8 3P	/
TCE23-M8 4P		TCE24-M8 4P	/
/		/	/
/		/	/
FCP23-M8 3P		/	FCP25-M8 3P
FCP23-M8 4P		/	FCP25-M8 4P
/		/	/
/		/	/
RCP23-M8 3P		RCP24-M8 3P	/
RCP23-M8 4P		RCP24-M8 4P	/
CCT23-M8		/	/
/		/	/
MC23-M8(2)		MC24-M8(2)	/
/		/	MC25-M8(3)(800)
MC23-M8(4)		/	MC25-M8(4)(1000/1250)
/		/	/
PIA23F-M8 3P		/	/
PIA23F-M8 4P		/	/
PIA23B-M8 3P		/	/
PIA23B-M8 4P		/	/
PISD23-M8 T		PISD24-M8 T	/
PISD23-M8 E		PISD24-M8 E	/
DOB23F-M8 3P(400A)	DOB23F-M8 3P(630A)	DOB24F-M8 3P	/
DOB23F-M8 4P(400A)	DOB23F-M8 4P(630A)	DOB24F-M8 4P	/
DOB23B-M8 3P(400A)	DOB23B-M8 3P(630A)	DOB24B-M8 3P	/
DOB23B-M8 4P(400A)	DOB23B-M8 4P(630A)	DOB24B-M8 4P	/
			/
			/
/		/	/
/		/	/
COMA22-M8 DC24V 0.5m			
COMA22-M8 DC24V 1.5m			
COMA22-M8 DC24V 3m			
COMA22-M8 AC230V 0.5m			
COMA22-M8 AC230V 1.5m			
COMA22-M8 AC230V 3m			
PSU22-M8			
PHS23-M8		PHS24-M8	PHS25-M8